SONY

CAMERA CONTROL UNIT

CCU-550
CCU-550P

MAINTENANCE MANUAL
Volume 2 1st Edition (Revised 1)
Serial No. 10001 and Higher (UC)
Serial No. 30001 and Higher (J)
Serial No. 40001 and Higher (CE)

⚠警告

このマニュアルは，サービス専用です。
お客様が，このマニュアルに記載された設置や保守，点検，修理など行うと感電や火災，人身事故につながることがあります。
危険をさけるため，サービストレーニングを受けた技術者のみご使用ください。

⚠WARNING

This manual is intended for qualified service personnel only.
To reduce the risk of electric shock, fire or injury, do not perform any servicing other than that contained in the operating instructions unless you are qualified to do so. Refer all servicing to qualified service personnel.

⚠WARNUNG

Die Anleitung ist nur für qualifiziertes Fachpersonal bestimmt.
Alle Wartungsarbeiten dürfen nur von qualifiziertem Fachpersonal ausgeführt werden. Um die Gefahr eines elektrischen Schlages, Feuergefahr und Verletzungen zu vermeiden, sind bei Wartungsarbeiten strikt die Angaben in der Anleitung zu befolgen. Andere als die angegeben Wartungsarbeiten dürfen nur von Personen ausgeführt werden, die eine spezielle Befähigung dazu besitzen.

⚠AVERTISSEMENT

Ce manual est destiné uniquement aux personnes compétentes en charge de l’entretien. Afin de réduire les risques de décharge électrique, d’incendie ou de blessure n’effectuer que les réparations indiquées dans le mode d’emploi à moins d’être qualifié pour en effectuer d’autres. Pour toute réparation faire appel à une personne compétente uniquement.

Table of Contents

Manual Structure

Purpose of this manual 5
Contents 5

1. Spare Parts

1-1. Exploded Views 1-1
CABINET BLOCK 1-1
FRONT PANEL BLOCK 1-2
BOARD BLOCK 1-3
REAR PANEL BLOCK 1-4
POWER ASSEMBLY 1-5
SCREWS AND WASHERS 1-6
1-2. Electrical Parts List 1-7
1-3. Supplied Accessories 1-50
1-4. Optional Fixture 1-50
1-5. Changed Parts 1-51

2. Semiconductor Pin Assignments

3. Block Diagrams

OVERALL BLOCK 3-2
DM-110 BOARD 3-4
VA-175 BOARD 3-6
AU-231 BOARD 3-10
AT-111 BOARD 3-12
FL-240 BOARD 3-14
PS-466 BOARD 3-14
PS-467 BOARD 3-14
SH-65 BOARD 3-14

4. Schematic Diagrams

DM-110 BOARD 4-1
VA-175A/175B/175P BOARD 4-8
AU-231 BOARD 4-20
AT-111 BOARD 4-24
AU-236 BOARD 4-27
MB-688 BOARD 4-28
FRAME WIRING 4-30

5. Board Layouts

DM-110 BOARD 5-1
VA-175 BOARD 5-4
AU-236 BOARD 5-8
AU-231 BOARD 5-9
AT-111 BOARD 5-12
MB-688 BOARD 5-14

http://getMANUAL.com

Manual Structure

Purpose of this manual

This manual is the maintenance manual for Camera Contorol Unit CCU-550/550P. This manual describes the information items necessary when the unit is supplied and installed, items on maintenance, and items that premise the service based on the components parts such as schematic diagrams, board layouts and spare parts list, assuming use of system and service engineers.

Contents

This followings are summaries of the each section for understanding the manual.

Maintenance Manual Volume 2

Section 1. Spare Parts
Describes parts list, exploded view, supplied accessories and fixtures list used in the unit.

Section 2. Semiconductor Pin Assignments
Describes function diagrams and pin names of semiconductor used in the unit.

Section 3. Block Diagrams
Describes overall block diagram and the block diagrams for every circuit board.

Section 4. Board Layouts
Describes board layouts for every circuit board.

Section 5. Schematic Diagrams
Describes schematic diagrams for every circuit board.

Maintenance Manual Volume 1

Section 1. Installation
Describes information about connector input/output signals, instance of configuration and function of internal switches.

Section 2. Service Overview
Describes information about replacement of part and self-diagnosis mode.

Section 3. Electrical Alignment
Describes electrical adjustment procedures.

Section 1
Spare Parts

1-1. Exploded Views

Note

The part that the part number is parenthesized is compatible with the part just above it.

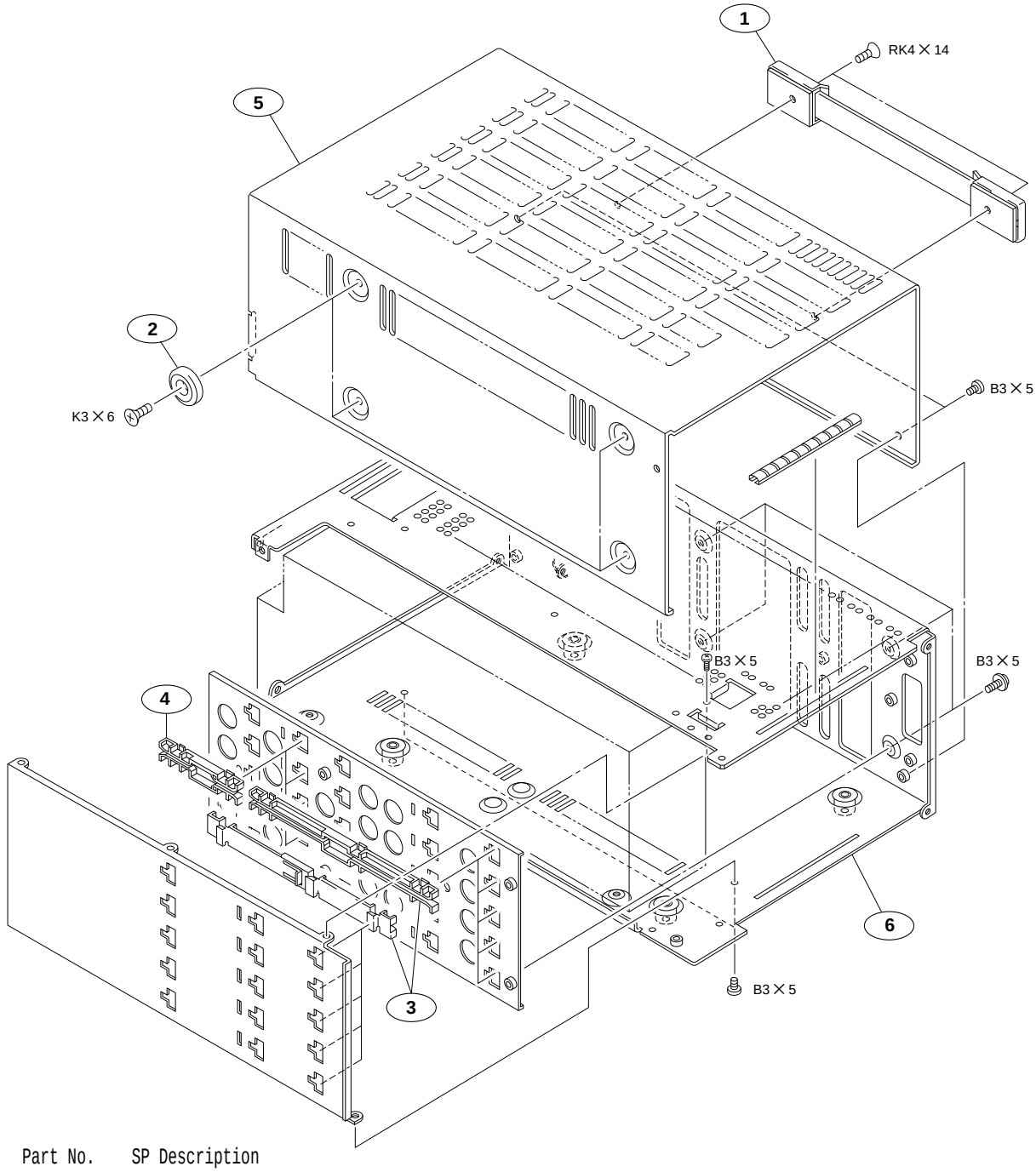

No.	Part No.	SP	Description
1	X-2275-501-1	s	HANDLE ASSY
2	2-382-110-00	o	LEG
3	3-169-099-01	o	RAIL, PC BOARD GUIDE
4	3-174-468-01	o	RAIL(60), PC BOARD GUIDE
5	3-606-144-01	o	COVER
6	3-603-521-03	o	CHASSIS,MAIN

FRONT PANEL BLOCK

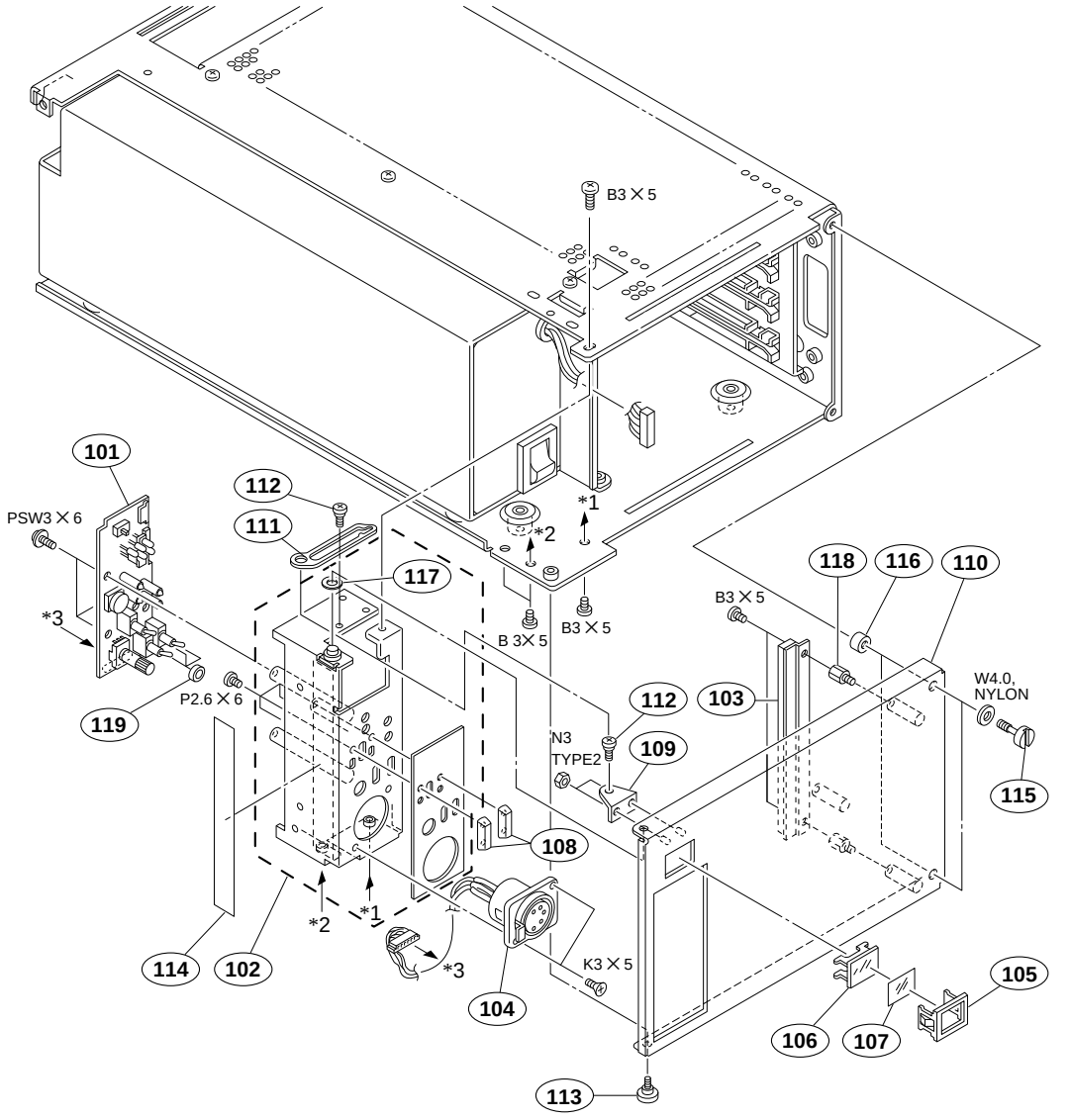

No.	Part No.	SP	Description
101	A-8277-389-A	o	MOUNTED CIRCUIT BOARD AU-236
102	X-3678-595-1	o	INCOM PLATE ASSY
103	X-3678-970-1	o	HOLDER ASSY, PC
104	1-778-343-11	o	CONNECTER, XLR 5P FEMALE “INCOM/PGM”
105	2-139-192-01	s	FRAME, INDICATOR WINDOW
106	2-139-193-02	s	WINDOW, INDICATOR
107	2-249-353-00	s	COVER, LAMP
108	2-295-991-00	o	GUARD, SWITCH
109	3-603-518-01	o	FRONT PANEL STOPPER(1)
110	3-603-519-02	o	FRONT PANEL
111	3-604-625-02	o	FRONT PANEL STOPPER (2)
112	3-613-164-21	o	SHAFT, STEP
113	3-678-715-00	o	PIN, TRIGGER
114	3-697-754-01	o	FRONT SIDE PANEL
115	3-697-760-01	o	SCREW,COIN
116	3-697-761-01	o	SPACER
117	3-701-441-21	s	WASHER
118	3-711-100-02	s	STAND-OFF
119	3-729-007-01	o	PLATE, ORNAMENTAL, TOGGLE SW

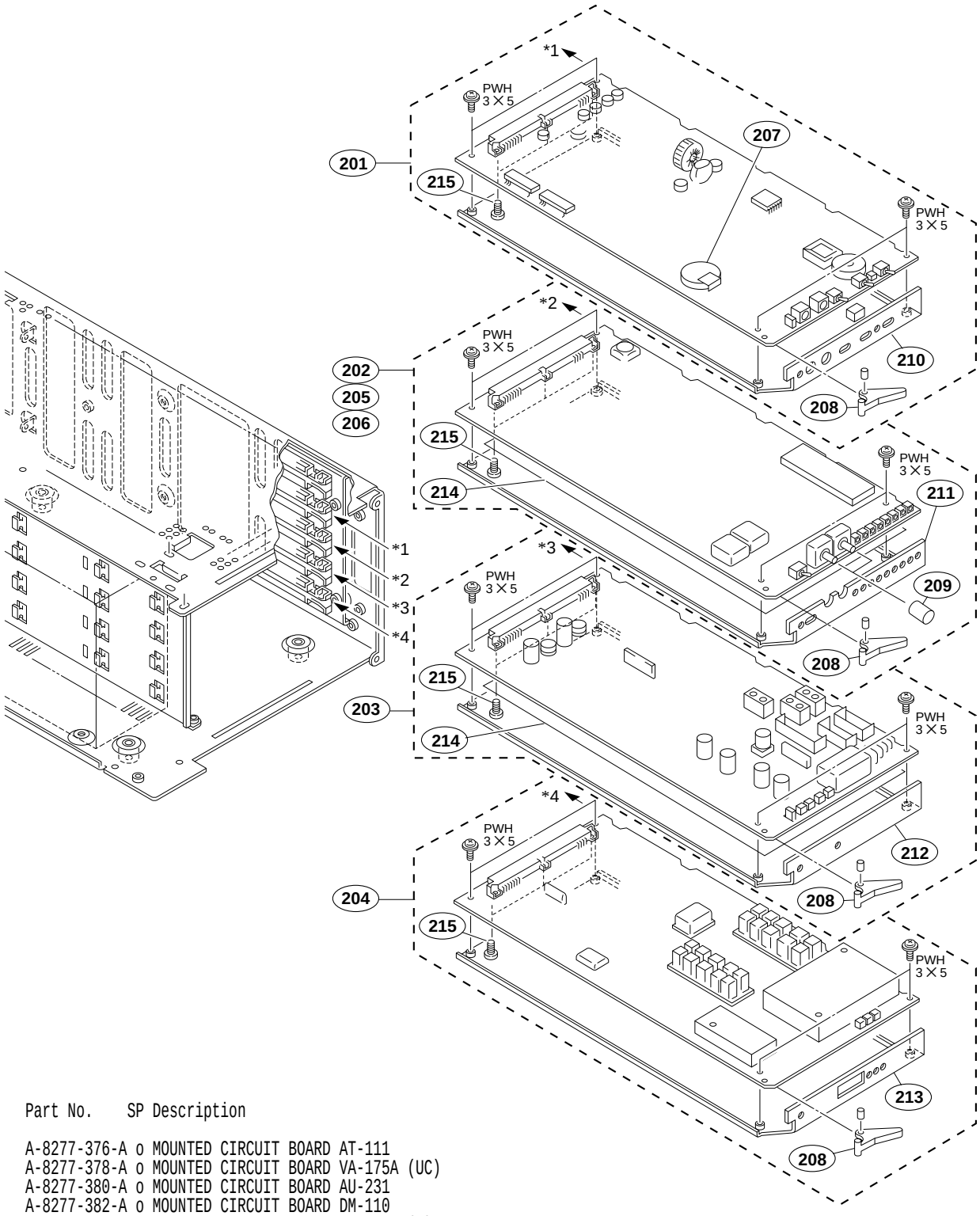

No.	Part No.	SP	Description
201	A-8277-376-A	o	MOUNTED CIRCUIT BOARD AT-111
202	A-8277-378-A	o	MOUNTED CIRCUIT BOARD VA-175A (UC)
203	A-8277-380-A	o	MOUNTED CIRCUIT BOARD AU-231
204	A-8277-382-A	o	MOUNTED CIRCUIT BOARD DM-110
205	A-8277-399-A	o	MOUNTED CIRCUIT BOARD VA-175B (J)
206	A-8277-403-A	o	MOUNTED CIRCUIT BOARD VA-175P (CE)
207	1-528-229-11	o	BATTERY, LITHIUM
208	2-251-622-01	o	LEVER, PC BOARD
209	3-657-627-11	s	KNOB (2)
210	3-697-755-04	o	PANEL,AT
211	3-697-756-02	o	PANEL,VA
212	3-697-757-03	o	PANEL,AU
213	3-697-758-03	o	PANEL,DM
214	3-697-870-01	o	INSULATER,BOARD
215	3-719-381-11	s	SCREW (M2X5)

REAR PANEL BLOCK

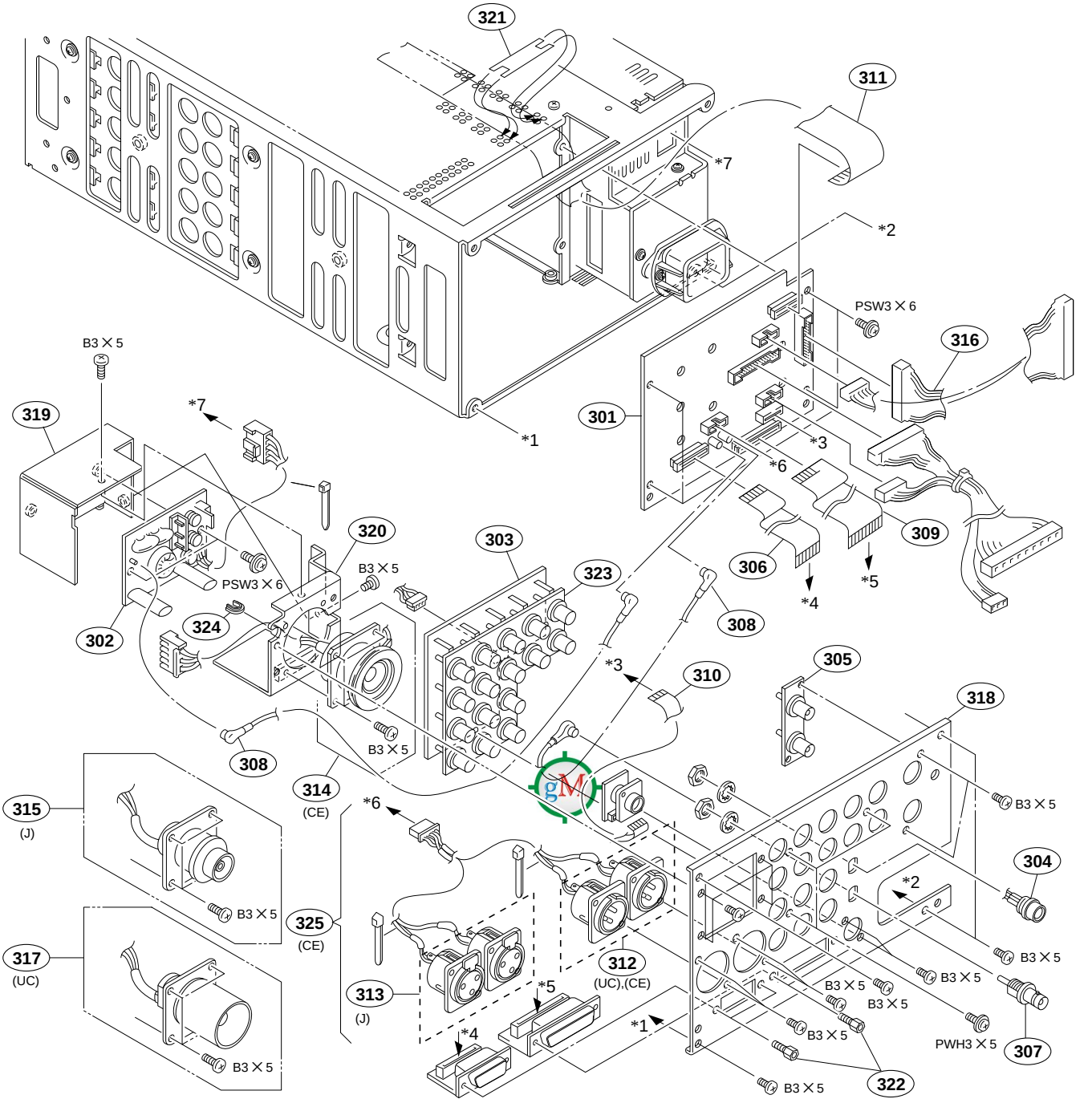

No.	Part No.	SP	Description
301	A-8277-384-A	o	MOUNTED CIRCUIT BOARD MB-688
302	A-8277-385-A	o	MOUNTED CIRCUIT BOARD IO-136
303	A-8277-386-A	o	MOUNTED CIRCUIT BOARD CN-1335
304	1-561-376-00	s	CONNECTOR 4P FEMALE "WF MODE"
305	1-750-881-11	s	CONVERTER, COAXIAL CONNECTOR "SERIAL OUTPUT
306	1-751-782-11	s	WIRE,FLEXIBLE CARD (16 CORE)
307	1-774-157-11	s	CONVERTER, COAXIAL CONNECTOR "COAX"
308	1-776-444-11	s	CABLE ASSEMBLY, COAXIAL
309	1-777-321-11	s	WIRE,FLEXIBLE CARD (25 CORE)
310	1-777-322-11	s	WIRE,FLEXIBLE CARD (8 CORE)
311	1-777-336-11	s	CABLE, FLEXIBLE FLAT (30 CORE)
312	1-778-341-11	s	CONNECTOR, XLR 3P MALE "MIC OUTPUT CH1/CH2" (UC/CE)
313	1-778-342-11	s	CONNECTOR, XLR 3P FEMALE "MIC OUTPUT CH1/CH2" (J)

No.	Part No.	SP	Description
314	A-8312-936-A	o	HARNESS (TRIAX-CE) "CAMERA" (CE)
315	A-8312-935-A	o	HARNESS (TRIAX-J) "CAMERA" (J)
316	1-956-309-21	s	HARNESS (POWER SUPPLY)
317	A-8312-934-A	o	HARNESS (TRIAX-UC) "CAMERA" (UC)
318	3-603-510-02	o	REAR PANEL
319	3-603-513-01	o	CN BOX(1)
320	3-603-514-02	o	CN BOX(2)
321	3-604-626-01	o	CLUMP, CABLE
322	3-673-910-31	s	SCREW, CONNECTOR
323	3-697-753-02	o	BNC PANEL
324	4-302-401-00	s	BUSHING, DEGAUSSING COIL
325	1-956-304-31	o	HARNESS (MIC) (CE)

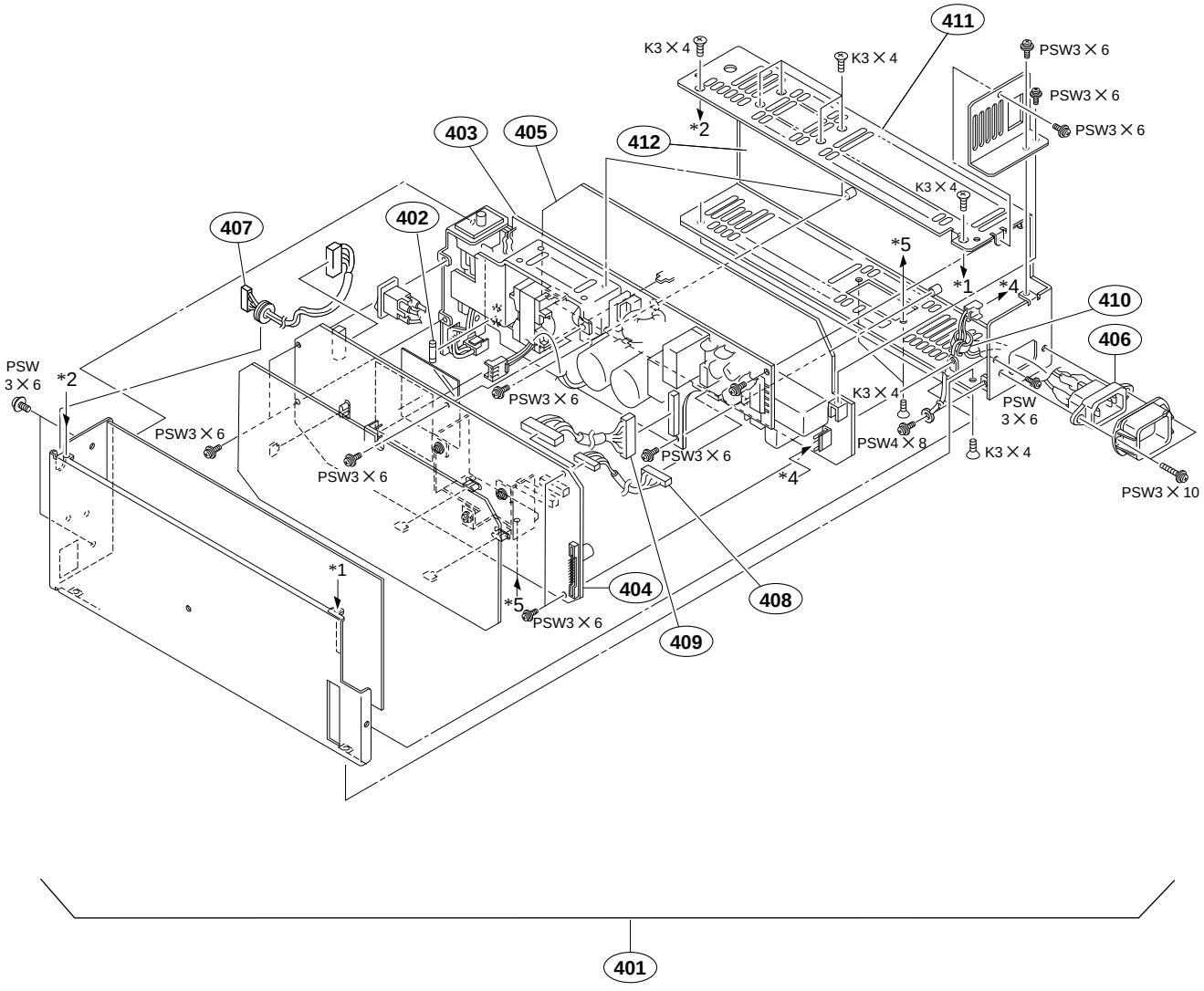

No.	Part No.	SP	Description
401	⚠ A-8312-596-A	s	POWER ASSY
	⚠ (1-468-149-11)	s	REGULATER, SWITCHING
402	⚠ 1-576-230-11	s	FUSE (H.B.C.) T3.150AH 250.0V
403	9-939-370-01	o	MOUNTED CIRCUIT BOARD PS-466
404	9-939-371-01	o	MOUNTED CIRCUIT BOARD PS-467
405	9-939-372-01	o	MOUNTED CIRCUIT BOARD FL-240
406	⚠ 1-957-107-11	o	HARNESS (AC IN)
407	1-957-108-11	o	HARNESS (AU)
408	1-957-109-11	o	SUB HARNESS (SW CONT)
409	1-957-110-11	o	SUB HARNESS (RELAY CONT)
410	1-500-440-11	o	FERRITE CORE
411	3-606-139-01	o	CHASSIS, PS
412	3-606-154-01	o	INSURATOR (1)

No.	Part No.	SP	Description
	7-621-731-08	s	SET-SCT,HEX. 2X2.5,FLAT POINT
	7-623-925-01	s	WASHER 4.0, NYLON
	7-627-556-58	s	SCREW +P 2.6X5
	7-682-246-04	s	SCREW +K 3X5
	7-682-247-09	s	SCREW +K 3X6
	7-682-364-09	s	SCREW +RK 4X14
	7-682-546-04	s	SCREW +B 3X5
	7-682-546-09	s	SCREW +B 3X5
	7-682-903-01	s	SCREW +PWH 3X5
	7-682-947-01	s	SCREW +PSW 3X6
	7-684-023-04	s	N 3, TYPE 2
	7-685-133-19	s	SCREW +P 2.6X6 TYPE2 NON-SLIT

1-2. Electrical Parts List

AT-111 BOARD

Ref. No. or Q'ty	Part No.	SP	Description
1pc	A-8277-376-A	o	MOUNTED CIRCUIT BOARD, AT-111
1pc	8-759-456-07	o	IC 28F010-CCU550-V2.01
1pc	3-697-755-04	o	PANEL,AT
1pc	2-251-622-01	o	LEVER, PC BOARD
4pcs	7-682-903-01	s	SCREW +PWH 3X5
3pcs	3-719-381-11	s	SCREW (M2X5)
1pc	3-697-870-02	o	INSULATER,BOARD
BT101	1-528-229-11	o	BATTERY, LITHIUM CR-2450
BZ101	1-529-025-00	s	BUZZER
C103	1-163-239-11	s	CERAMIC, CHIP 33PF 5% 50V
C104	1-163-038-00	s	CERAMIC, CHIP 0.1uF 25V
C105	1-163-038-00	s	CERAMIC, CHIP 0.1uF 25V
C106	1-163-038-00	s	CERAMIC, CHIP 0.1uF 25V
C108	1-163-038-00	s	CERAMIC, CHIP 0.1uF 25V
C109	1-163-038-00	s	CERAMIC, CHIP 0.1uF 25V
C110	1-126-391-11	s	ELECT 47uF 20% 6.3V
C111	1-163-038-00	s	CERAMIC, CHIP 0.1uF 25V
C112	1-163-038-00	s	CERAMIC, CHIP 0.1uF 25V
C113	1-163-038-00	s	CERAMIC, CHIP 0.1uF 25V
C114	1-163-038-00	s	CERAMIC, CHIP 0.1uF 25V
C115	1-163-038-00	s	CERAMIC, CHIP 0.1uF 25V
C116	1-163-038-00	s	CERAMIC, CHIP 0.1uF 25V
C117	1-163-038-00	s	CERAMIC, CHIP 0.1uF 25V
C118	1-163-038-00	s	CERAMIC, CHIP 0.1uF 25V
C119	1-163-038-00	s	CERAMIC, CHIP 0.1uF 25V
C120	1-163-038-00	s	CERAMIC, CHIP 0.1uF 25V
C121	1-163-038-00	s	CERAMIC, CHIP 0.1uF 25V
C122	1-163-038-00	s	CERAMIC, CHIP 0.1uF 25V
C123	1-163-127-00	s	CERAMIC, CHIP 270PF 5% 50V
C124	1-163-038-00	s	CERAMIC, CHIP 0.1uF 25V
C125	1-163-038-00	s	CERAMIC, CHIP 0.1uF 25V
C126	1-163-038-00	s	CERAMIC, CHIP 0.1uF 25V
C127	1-163-038-00	s	CERAMIC, CHIP 0.1uF 25V
C128	1-163-239-11	s	CERAMIC, CHIP 33PF 5% 50V
C129	1-163-239-11	s	CERAMIC, CHIP 33PF 5% 50V
C130	1-163-038-00	s	CERAMIC, CHIP 0.1uF 25V
C131	1-163-239-11	s	CERAMIC, CHIP 33PF 5% 50V
C132	1-163-239-11	s	CERAMIC, CHIP 33PF 5% 50V
C133	1-163-239-11	s	CERAMIC, CHIP 33PF 5% 50V
C134	1-163-234-11	s	CERAMIC 20PF 5% 50V
C135	1-163-038-00	s	CERAMIC, CHIP 0.1uF 25V
C136	1-104-851-11	s	TANTALUM, CHIP 10uF 20% 10V
C137	1-163-239-11	s	CERAMIC, CHIP 33PF 5% 50V
C138	1-163-234-11	s	CERAMIC 20PF 5% 50V
C139	1-163-239-11	s	CERAMIC, CHIP 33PF 5% 50V
C140	1-104-851-11	s	TANTALUM, CHIP 10uF 20% 10V
C141	1-163-038-00	s	CERAMIC, CHIP 0.1uF 25V
C142	1-163-038-00	s	CERAMIC, CHIP 0.1uF 25V
C143	1-163-038-00	s	CERAMIC, CHIP 0.1uF 25V
C144	1-163-235-11	s	CERAMIC, CHIP 22PF 5% 50V
C147	1-163-038-00	s	CERAMIC, CHIP 0.1uF 25V
C148	1-163-038-00	s	CERAMIC, CHIP 0.1uF 25V
C149	1-163-038-00	s	CERAMIC, CHIP 0.1uF 25V
C150	1-163-038-00	s	CERAMIC, CHIP 0.1uF 25V
C152	1-163-038-00	s	CERAMIC, CHIP 0.1uF 25V
C154	1-163-038-00	s	CERAMIC, CHIP 0.1uF 25V

(AT-111 BOARD)

Ref. No. or Q'ty	Part No.	SP	Description
C155	1-163-038-00	s	CERAMIC, CHIP 0.1uF 25V
C156	1-163-038-00	s	CERAMIC, CHIP 0.1uF 25V
C157	1-163-038-00	s	CERAMIC, CHIP 0.1uF 25V
C159	1-126-395-11	s	ELECT 22uF 20% 16V
C161	1-163-038-00	s	CERAMIC, CHIP 0.1uF 25V
C162	1-163-038-00	s	CERAMIC, CHIP 0.1uF 25V
C163	1-126-391-11	s	ELECT 47uF 20% 6.3V
C166	1-163-038-00	s	CERAMIC, CHIP 0.1uF 25V
C167	1-163-038-00	s	CERAMIC, CHIP 0.1uF 25V
C168	1-163-038-00	s	CERAMIC, CHIP 0.1uF 25V
C169	1-163-235-11	s	CERAMIC, CHIP 22PF 5% 50V
C170	1-163-235-11	s	CERAMIC, CHIP 22PF 5% 50V
C171	1-163-275-11	s	CERAMIC 0.001uF 5% 50V
C172	1-163-038-00	s	CERAMIC, CHIP 0.1uF 25V
C173	1-163-038-00	s	CERAMIC, CHIP 0.1uF 25V
C174	1-163-245-11	s	CERAMIC, CHIP 56PF 5% 50V
C175	1-163-229-11	s	CERAMIC 12PF 5% 50V
C176	1-163-038-00	s	CERAMIC, CHIP 0.1uF 25V
C177	1-163-127-00	s	CERAMIC, CHIP 270PF 5% 50V
C178	1-163-038-00	s	CERAMIC, CHIP 0.1uF 25V
C179	1-163-038-00	s	CERAMIC, CHIP 0.1uF 25V
C180	1-163-038-00	s	CERAMIC, CHIP 0.1uF 25V
C181	1-126-391-11	s	ELECT 47uF 20% 6.3V
C182	1-163-038-00	s	CERAMIC, CHIP 0.1uF 25V
C183	1-163-038-00	s	CERAMIC, CHIP 0.1uF 25V
C184	1-163-038-00	s	CERAMIC, CHIP 0.1uF 25V
C185	1-126-391-11	s	ELECT 47uF 20% 6.3V
C186	1-104-911-11	s	TANTALUM, CHIP 33uF 20% 10V
C187	1-104-911-11	s	TANTALUM, CHIP 33uF 20% 10V
C188	1-126-391-11	s	ELECT 47uF 20% 6.3V
C301	1-126-395-11	s	ELECT 22uF 20% 16V
C304	1-126-396-11	s	ELECT, CHIP 47uF 20% 16V
C305	1-126-391-11	s	ELECT 47uF 20% 6.3V
C306	1-104-823-11	s	TANTALUM, CHIP 47uF 20% 16V
C307	1-104-823-11	s	TANTALUM, CHIP 47uF 20% 16V
C308	1-126-391-11	s	ELECT 47uF 20% 6.3V
C309	1-126-398-11	s	ELECT, CHIP 4.7uF 20% 35V
C310	1-126-398-11	s	ELECT, CHIP 4.7uF 20% 35V
C311	1-163-038-00	s	CERAMIC, CHIP 0.1uF 25V
C312	1-104-911-11	s	TANTALUM, CHIP 33uF 20% 10V
C313	1-104-911-11	s	TANTALUM, CHIP 33uF 20% 10V
C314	1-104-911-11	s	TANTALUM, CHIP 33uF 20% 10V
C315	1-126-401-11	s	ELECT, CHIP 1uF 20% 50V
C317	1-163-038-00	s	CERAMIC, CHIP 0.1uF 25V
C318	1-135-164-21	s	TANTALUM, CHIP 22uF 20% 10V
C319	1-104-852-11	s	TANTALUM, CHIP 22uF 20% 10V
C320	1-126-396-11	s	ELECT, CHIP 47uF 20% 16V
C321	1-135-177-21	s	TANTALUM, CHIP 1uF 10% 25V
C322	1-163-275-11	s	CERAMIC 0.001uF 5% 50V
C323	1-104-852-11	s	TANTALUM, CHIP 22uF 20% 10V
C324	1-164-232-11	s	CERAMIC, CHIP 0.01uF 10% 50V
C326	1-164-161-11	s	CERAMIC, CHIP 0.0022uF 10% 100V
C327	1-104-851-11	s	TANTALUM, CHIP 10uF 20% 10V
C328	1-128-414-21	s	ELECT 220uF 20% 6.3V
C329	1-163-038-00	s	CERAMIC, CHIP 0.1uF 25V
C330	1-128-414-21	s	ELECT 220uF 20% 6.3V
C331	1-163-038-00	s	CERAMIC, CHIP 0.1uF 25V
C332	1-104-478-11	s	TANTAL 10uF 20% 35V
C401	1-163-275-11	s	CERAMIC 0.001uF 5% 50V

(AT-111 BOARD)

Ref. No. or Q'ty	Part No.	SP	Description
C402	1-163-275-11	s	CERAMIC 0.001uF 5% 50V
C403	1-163-275-11	s	CERAMIC 0.001uF 5% 50V
C404	1-163-275-11	s	CERAMIC 0.001uF 5% 50V
C405	1-163-038-00	s	CERAMIC, CHIP 0.1uF 25V
C406	1-163-038-00	s	CERAMIC, CHIP 0.1uF 25V
C407	1-126-391-11	s	ELECT 47uF 20% 6.3V
C408	1-126-391-11	s	ELECT 47uF 20% 6.3V
C409	1-126-395-11	s	ELECT 22uF 20% 16V
C410	1-104-823-11	s	TANTALUM, CHIP 47uF 20% 16V
C411	1-104-823-11	s	TANTALUM, CHIP 47uF 20% 16V
C412	1-163-275-11	s	CERAMIC 0.001uF 5% 50V
C413	1-163-251-11	s	CERAMIC, CHIP 100PF 5% 50V
C414	1-163-251-11	s	CERAMIC, CHIP 100PF 5% 50V
C415	1-126-391-11	s	ELECT 47uF 20% 6.3V
C416	1-126-395-11	s	ELECT 22uF 20% 16V
C417	1-163-017-00	s	CERAMIC, CHIP 0.0047uF 5% 50V
C418	1-163-017-00	s	CERAMIC, CHIP 0.0047uF 5% 50V
D101	8-719-947-01	s	DIODE FMP1
D102	8-719-947-01	s	DIODE FMP1
D103	8-719-947-01	s	DIODE FMP1
D104	8-719-947-01	s	DIODE FMP1
D105	8-719-059-59	s	DIODE MA3J74200LSO
D106	8-719-059-59	s	DIODE MA3J74200LSO
D107	8-719-059-59	s	DIODE MA3J74200LSO
D301	8-719-974-39	s	DIODE HLMP-6300-010
D302	8-719-029-75	s	DIODE RD12UJN-T1
D303	8-719-029-67	s	DIODE RD5.6UJN-T1
D304	8-719-029-67	s	DIODE RD5.6UJN-T1
D305	8-719-029-62	s	DIODE RD3.9UH-T1
D306	8-719-029-62	s	DIODE RD3.9UH-T1
D307	8-759-274-67	s	IC LM4040BIM3X-5.0
D308	8-719-029-73	s	DIODE RD10UJN-T1
D309	8-719-023-53	s	DIODE EA30QS04-F
D401	8-719-024-81	s	DIODE 1SS300-TE85L
D402	8-719-024-81	s	DIODE 1SS300-TE85L
D403	8-719-404-35	s	DIODE MA141WK
D404	8-719-404-35	s	DIODE MA141WK
D405	8-719-021-31	s	DIODE UZM5.1B
D406	8-719-021-31	s	DIODE UZM5.1B
D407	8-719-404-35	s	DIODE MA141WK
D408	8-719-024-81	s	DIODE 1SS300-TE85L
D410	8-719-024-81	s	DIODE 1SS300-TE85L
D412	8-719-404-35	s	DIODE MA141WK
D413	8-719-024-81	s	DIODE 1SS300-TE85L
IC102	8-759-925-76	s	IC SN74HC08ANS
IC103	8-759-092-81	s	IC SN75158PS
IC105	8-759-058-58	s	IC TC7S04FU(TE85R)
IC106	8-759-926-11	s	IC SN74HC138ANS
IC107	8-759-209-57	s	IC TC4S69F
IC108	8-759-082-58	s	IC TC7W08FU
IC109	8-759-287-56	s	IC UPD4701AGT
IC110	8-759-287-56	s	IC UPD4701AGT
IC111	8-759-008-74	s	IC MC14001BF
IC112	8-759-008-79	s	IC MC14011BF
IC113	8-759-381-59	s	IC MC14020BFEL
IC114	8-759-996-82	s	IC MSM82C55A-2GS
IC115	8-759-926-77	s	IC SN74HC541ANS
IC116	8-759-926-77	s	IC SN74HC541ANS

(AT-111 BOARD)

Ref. No. or Q'ty	Part No.	SP	Description
IC117	8-759-239-58	s	IC TC74HC221AF
IC118	8-759-926-07	s	IC SN74HC132ANS
IC119	8-759-277-99	s	IC CXD8889R
IC120	8-759-277-99	s	IC CXD8889R
IC121	8-759-082-57	s	IC TC7W04FU
IC122	8-759-925-74	s	IC SN74HC04ANS-E20
IC123	8-759-637-07	s	IC M62021FP
IC125	8-759-035-93	s	IC TC7S32F
IC126	8-759-388-16	o	IC HD6435328RE49F
IC127	8-759-285-08	s	IC CXD8344AQ
IC128	8-759-285-09	s	IC CXD8892Q
IC129	8-759-058-58	s	IC TC7S04FU(TE85R)
IC130	8-759-058-58	s	IC TC7S04FU(TE85R)
IC131	8-759-720-87	s	IC HN58C257T
IC132	8-759-720-87	s	IC HN58C257T
IC135	8-752-373-03	s	IC CXK581000ATM-70LL-TL
IC137	8-759-925-85	s	IC SN74HC32ANS
IC139	8-759-173-16	s	IC TL062CPW
IC140	8-759-082-57	s	IC TC7W04FU
IC141	8-759-037-79	s	IC SN74HC163ANS
IC142	8-759-078-75	s	IC UPD6453GT-610
IC143	8-759-058-58	s	IC TC7S04FU(TE85R)
IC144	8-759-058-62	s	IC TC7S08FU(TE85R)
IC145	8-759-058-62	s	IC TC7S08FU(TE85R)
IC146	8-759-925-72	s	IC SN74HC02ANS
IC147	8-759-996-82	s	IC MSM82C55A-2GS
IC148	8-759-996-82	s	IC MSM82C55A-2GS
IC302	8-759-173-16	s	IC TL062CPW
IC303	8-759-173-16	s	IC TL062CPW
IC304	8-759-937-36	s	IC TL1451ACNS
IC401	8-759-008-79	s	IC MC14011BF
IC402	8-759-231-30	s	IC TC4S30F(TE85R)
IC403	8-759-098-95	s	IC TA78DS05F(TE12L)
IC404	8-759-098-95	s	IC TA78DS05F(TE12L)
IS133	1-540-151-21	s	SOCKET, IC
L102	1-412-026-11	s	INDUCTOR CHIP 1uH
L103	1-412-026-11	s	INDUCTOR CHIP 1uH
L104	1-412-032-11	s	INDUCTOR CHIP 100uH
L105	1-412-026-11	s	INDUCTOR CHIP 1uH
L106	1-412-026-11	s	INDUCTOR CHIP 1uH
L107	1-412-026-11	s	INDUCTOR CHIP 1uH
L108	1-412-026-11	s	INDUCTOR CHIP 1uH
L109	1-412-026-11	s	INDUCTOR CHIP 1uH
L110	1-412-026-11	s	INDUCTOR CHIP 1uH
L111	1-412-026-11	s	INDUCTOR CHIP 1uH
L113	1-412-026-11	s	INDUCTOR CHIP 1uH
L114	1-412-026-11	s	INDUCTOR CHIP 1uH
L115	1-412-026-11	s	INDUCTOR CHIP 1uH
L117	1-412-026-11	s	INDUCTOR CHIP 1uH
L118	1-412-026-11	s	INDUCTOR CHIP 1uH
L119	1-412-026-11	s	INDUCTOR CHIP 1uH
L120	1-412-026-11	s	INDUCTOR CHIP 1uH
L122	1-412-030-11	s	INDUCTOR CHIP 22uH
L123	1-412-030-11	s	INDUCTOR CHIP 22uH
L124	1-412-026-11	s	INDUCTOR CHIP 1uH
L125	1-410-388-31	s	INDUCTOR CHIP 39UH
L126	1-412-026-11	s	INDUCTOR CHIP 1uH
L127	1-410-386-11	s	INDUCTOR CHIP 27UH

http://getMANUAL.com

(AT-111 BOARD)

Ref. No. or Q'ty	Part No.	SP	Description
L128	1-412-026-11	s	INDUCTOR CHIP 1uH
L129	1-412-032-11	s	INDUCTOR CHIP 100uH
L301	1-412-032-11	s	INDUCTOR CHIP 100uH
L302	1-411-227-21	s	COIL, CHOKE 100UH
L303	1-412-032-11	s	INDUCTOR CHIP 100uH
L304	1-424-642-11	s	COIL, CHOKE 47UH
L306	1-424-642-11	s	COIL, CHOKE 47UH
L307	1-412-049-11	s	CHOKE 200uH
L308	1-411-227-21	s	COIL, CHOKE 100UH
L401	1-412-030-11	s	INDUCTOR CHIP 22uH
L402	1-412-030-11	s	INDUCTOR CHIP 22uH
L403	1-412-030-11	s	INDUCTOR CHIP 22uH
PH101	8-749-013-27	s	IC HCPL-M600-500
PH102	8-749-013-27	s	IC HCPL-M600-500
PH401	8-749-010-24	s	PHOTO CUPPLER PS2604L
PH402	8-749-010-24	s	PHOTO CUPPLER PS2604L
Q104	8-729-117-16	s	TRANSISTOR 2SA1611-M6
Q105	8-729-117-32	s	TRANSISTOR 2SC4177
Q106	8-729-117-32	s	TRANSISTOR 2SC4177
Q301	8-729-117-16	s	TRANSISTOR 2SA1611-M6
Q302	8-729-117-32	s	TRANSISTOR 2SC4177
Q303	8-729-117-16	s	TRANSISTOR 2SA1611-M6
Q304	8-729-101-07	s	TRANSISTOR 2SB798
Q305	8-729-807-51	s	TRANSISTOR 2SD1623-S
Q306	8-729-101-07	s	TRANSISTOR 2SB798
Q307	8-729-117-16	s	TRANSISTOR 2SA1611-M6
Q308	8-729-101-07	s	TRANSISTOR 2SB798
Q401	8-729-117-32	s	TRANSISTOR 2SC4177
Q402	8-729-117-32	s	TRANSISTOR 2SC4177
Q404	8-729-117-16	s	TRANSISTOR 2SA1611-M6
Q406	8-729-141-75	s	TRANSISTOR 2SD596DV345
Q407	8-729-141-75	s	TRANSISTOR 2SD596DV345
Q408	8-729-117-16	s	TRANSISTOR 2SA1611-M6
R102	1-216-049-91	s	METAL, CHIP 1K 5% 1/10W
R103	1-216-049-91	s	METAL, CHIP 1K 5% 1/10W
R105	1-216-635-11	s	METAL, CHIP 220 0.5% 1/10W
R106	1-216-001-00	s	METAL, CHIP 10 5% 1/10W
R107	1-216-001-00	s	METAL, CHIP 10 5% 1/10W
R108	1-216-069-00	s	METAL, CHIP 6.8K 5% 1/10W
R109	1-216-069-00	s	METAL, CHIP 6.8K 5% 1/10W
R111	1-216-699-11	s	METAL, CHIP 100K 0.50% 1/10W
R112	1-216-073-00	s	METAL, CHIP 10K 5% 1/10W
R113	1-216-295-00	s	METAL, CHIP 0 1/10W
R114	1-216-051-00	s	METAL, CHIP 1.2K 5% 1/10W
R115	1-216-121-91	s	METAL, CHIP 1M 5% 1/10W
R116	1-216-049-91	s	METAL, CHIP 1K 5% 1/10W
R117	1-216-097-91	s	METAL, CHIP 100K 5% 1/10W
R118	1-216-001-00	s	METAL, CHIP 10 5% 1/10W
R120	1-216-097-91	s	METAL, CHIP 100K 5% 1/10W
R122	1-216-667-11	s	METAL, CHIP 4.7K 0.5% 1/10W
R123	1-216-686-11	s	METAL, CHIP 30K 0.5% 1/10W
R124	1-216-065-00	s	METAL, CHIP 4.7K 5% 1/10W
R127	1-216-073-00	s	METAL, CHIP 10K 5% 1/10W
R129	1-216-686-11	s	METAL, CHIP 30K 0.5% 1/10W
R130	1-218-754-11	s	METAL 120K 0.50% 1/10W
R131	1-218-754-11	s	METAL 120K 0.50% 1/10W
R132	1-216-073-00	s	METAL, CHIP 10K 5% 1/10W
R133	1-216-073-00	s	METAL, CHIP 10K 5% 1/10W

(AT-111 BOARD)

Ref. No. or Q'ty	Part No.	SP	Description
R134	1-216-295-00	s	METAL, CHIP 0 1/10W
R135	1-216-687-11	s	METAL, CHIP 33K 0.5% 1/10W
R137	1-216-675-11	s	METAL, CHIP 10K 0.5% 1/10W
R138	1-216-660-11	s	METAL 2.4K 0.50% 1/10W
R139	1-216-065-00	s	METAL, CHIP 4.7K 5% 1/10W
R140	1-216-651-11	s	METAL, CHIP 1K 0.5% 1/10W
R141	1-216-627-11	s	METAL, CHIP 100 0.50% 1/10W
R142	1-216-065-00	s	METAL, CHIP 4.7K 5% 1/10W
R143	1-216-017-91	s	METAL, CHIP 47 5% 1/10W
R149	1-216-097-91	s	METAL, CHIP 100K 5% 1/10W
R155	1-216-073-00	s	METAL, CHIP 10K 5% 1/10W
R157	1-216-073-00	s	METAL, CHIP 10K 5% 1/10W
R158	1-216-295-00	s	METAL, CHIP 0 1/10W
R159	1-216-295-00	s	METAL, CHIP 0 1/10W
R160	1-216-295-00	s	METAL, CHIP 0 1/10W
R162	1-216-097-91	s	METAL, CHIP 100K 5% 1/10W
R163	1-216-295-00	s	METAL, CHIP 0 1/10W
R165	1-216-079-00	s	METAL, CHIP 18K 5% 1/10W
R166	1-216-634-11	s	METAL, CHIP 200 0.50% 1/10W
R170	1-216-049-91	s	METAL, CHIP 1K 5% 1/10W
R171	1-216-049-91	s	METAL, CHIP 1K 5% 1/10W
R172	1-216-097-91	s	METAL, CHIP 100K 5% 1/10W
R173	1-216-049-91	s	METAL, CHIP 1K 5% 1/10W
R301	1-216-635-11	s	METAL, CHIP 220 0.5% 1/10W
R302	1-216-683-11	s	METAL, CHIP 22K 0.50% 1/10W
R303	1-216-683-11	s	METAL, CHIP 22K 0.50% 1/10W
R304	1-216-683-11	s	METAL, CHIP 22K 0.50% 1/10W
R305	1-216-651-11	s	METAL, CHIP 1K 0.5% 1/10W
R306	1-216-651-11	s	METAL, CHIP 1K 0.5% 1/10W
R307	1-216-683-11	s	METAL, CHIP 22K 0.50% 1/10W
R308	1-216-683-11	s	METAL, CHIP 22K 0.50% 1/10W
R309	1-216-683-11	s	METAL, CHIP 22K 0.50% 1/10W
R310	1-216-683-11	s	METAL, CHIP 22K 0.50% 1/10W
R311	1-216-683-11	s	METAL, CHIP 22K 0.50% 1/10W
R312	1-216-691-11	s	METAL, CHIP 47K 0.50% 1/10W
R313	1-216-691-11	s	METAL, CHIP 47K 0.50% 1/10W
R314	1-216-659-11	s	METAL, CHIP 2.2K 0.5% 1/10W
R315	1-216-691-11	s	METAL, CHIP 47K 0.50% 1/10W
R316	1-216-687-11	s	METAL, CHIP 33K 0.5% 1/10W
R317	1-216-097-91	s	METAL, CHIP 100K 5% 1/10W
R318	1-216-675-11	s	METAL, CHIP 10K 0.5% 1/10W
R319	1-216-675-11	s	METAL, CHIP 10K 0.5% 1/10W
R320	1-216-675-11	s	METAL, CHIP 10K 0.5% 1/10W
R321	1-216-691-11	s	METAL, CHIP 47K 0.50% 1/10W
R322	1-216-699-11	s	METAL, CHIP 100K 0.50% 1/10W
R323	1-216-667-11	s	METAL, CHIP 4.7K 0.5% 1/10W
R325	1-216-699-11	s	METAL, CHIP 100K 0.50% 1/10W
R326	1-216-699-11	s	METAL, CHIP 100K 0.50% 1/10W
R327	1-216-687-11	s	METAL, CHIP 33K 0.5% 1/10W
R328	1-216-647-11	s	METAL, CHIP 680 0.5% 1/10W
R329	1-216-641-11	s	METAL, CHIP 390 0.5% 1/10W
R330	1-216-679-11	s	METAL, CHIP 15K 0.5% 1/10W
R331	1-216-674-11	s	METAL, CHIP 9.1K 0.5% 1/10W
R332	1-216-309-00	s	METAL 5.6 5% 1/10W
R333	1-216-641-11	s	METAL, CHIP 390 0.5% 1/10W
R334	1-216-309-00	s	METAL 5.6 5% 1/10W
R401	1-216-049-91	s	METAL, CHIP 1K 5% 1/10W
R402	1-216-049-91	s	METAL, CHIP 1K 5% 1/10W
R403	1-216-079-00	s	METAL, CHIP 18K 5% 1/10W

(AT-111 BOARD)

Ref. No. or Q'ty	Part No.	SP	Description
R404	1-216-079-00	s	METAL, CHIP 18K 5% 1/10W
R405	1-216-065-00	s	METAL, CHIP 4.7K 5% 1/10W
R406	1-216-659-11	s	METAL, CHIP 2.2K 0.5% 1/10W
R407	1-216-691-11	s	METAL, CHIP 47K 0.50% 1/10W
R408	1-216-065-00	s	METAL, CHIP 4.7K 5% 1/10W
R409	1-216-659-11	s	METAL, CHIP 2.2K 0.5% 1/10W
R410	1-216-691-11	s	METAL, CHIP 47K 0.50% 1/10W
R411	1-216-679-11	s	METAL, CHIP 15K 0.5% 1/10W
R412	1-216-679-11	s	METAL, CHIP 15K 0.5% 1/10W
R413	1-216-065-00	s	METAL, CHIP 4.7K 5% 1/10W
R414	1-216-065-00	s	METAL, CHIP 4.7K 5% 1/10W
R415	1-216-691-11	s	METAL, CHIP 47K 0.50% 1/10W
R416	1-216-691-11	s	METAL, CHIP 47K 0.50% 1/10W
R418	1-216-049-91	s	METAL, CHIP 1K 5% 1/10W
R421	1-216-049-91	s	METAL, CHIP 1K 5% 1/10W
R422	1-216-017-91	s	METAL, CHIP 47 5% 1/10W
R426	1-216-687-11	s	METAL, CHIP 33K 0.5% 1/10W
R427	1-216-065-00	s	METAL, CHIP 4.7K 5% 1/10W
R429	1-216-687-11	s	METAL, CHIP 33K 0.5% 1/10W
R431	1-216-065-00	s	METAL, CHIP 4.7K 5% 1/10W
RB101	1-239-309-11	s	RESISTOR BLOCK, CHIP 100KX8
RB102	1-239-309-11	s	RESISTOR BLOCK, CHIP 100KX8
RB103	1-236-904-11	s	RES, NETWORK 1KX4
RB104	1-236-904-11	s	RES, NETWORK 1KX4
RB105	1-236-904-11	s	RES, NETWORK 1KX4
RB106	1-236-907-11	s	RESISTOR BLOCK, CHIP 100KX4
RB107	1-239-309-11	s	RESISTOR BLOCK, CHIP 100KX8
RB108	1-239-309-11	s	RESISTOR BLOCK, CHIP 100KX8
RB109	1-239-309-11	s	RESISTOR BLOCK, CHIP 100KX8
RB110	1-236-907-11	s	RESISTOR BLOCK, CHIP 100KX4
RB111	1-236-904-11	s	RES, NETWORK 1KX4
RB112	1-236-904-11	s	RES, NETWORK 1KX4
RB113	1-236-907-11	s	RESISTOR BLOCK, CHIP 100KX4
RB114	1-239-309-11	s	RESISTOR BLOCK, CHIP 100KX8
RB115	1-239-309-11	s	RESISTOR BLOCK, CHIP 100KX8
RB116	1-236-904-11	s	RES, NETWORK 1KX4
RB117	1-236-904-11	s	RES, NETWORK 1KX4
RB118	1-239-309-11	s	RESISTOR BLOCK, CHIP 100KX8
RB119	1-236-904-11	s	RES, NETWORK 1KX4
RB120	1-236-904-11	s	RES, NETWORK 1KX4
RB121	1-239-309-11	s	RESISTOR BLOCK, CHIP 100KX8
RB122	1-236-904-11	s	RES, NETWORK 1KX4
RB123	1-236-904-11	s	RES, NETWORK 1KX4
RB124	1-236-904-11	s	RES, NETWORK 1KX4
RB125	1-236-904-11	s	RES, NETWORK 1KX4
RB126	1-236-904-11	s	RES, NETWORK 1KX4
RB127	1-236-904-11	s	RES, NETWORK 1KX4
RB128	1-239-309-11	s	RESISTOR BLOCK, CHIP 100KX8
RB129	1-239-309-11	s	RESISTOR BLOCK, CHIP 100KX8
RB131	1-236-904-11	s	RES, NETWORK 1KX4
RB132	1-239-309-11	s	RESISTOR BLOCK, CHIP 100KX8
RB134	1-236-904-11	s	RES, NETWORK 1KX4
RB135	1-239-309-11	s	RESISTOR BLOCK, CHIP 100KX8
RB136	1-239-309-11	s	RESISTOR BLOCK, CHIP 100KX8
RV101	1-241-264-11	s	RES, ADJ, METALT 10K
S101	1-762-117-11	s	SWITCH, ROTARY
S102	1-762-117-11	s	SWITCH, ROTARY
S103	1-692-536-11	s	SWITCH, DIP

(AT-111 BOARD)

Ref. No. or Q'ty	Part No.	SP	Description
S104	1-692-536-11	s	SWITCH, DIP
S105	1-692-530-11	s	SWITCH, TOGGLE
S106	1-692-530-11	s	SWITCH, TOGGLE
S107	1-762-775-11	s	SWITCH, TOGGLE
S108	1-692-536-11	s	SWITCH, DIP
S401	1-570-711-11	s	SWITCH, SLIDE
S402	1-570-711-11	s	SWITCH, SLIDE
S403	1-570-711-11	s	SWITCH, SLIDE
S404	1-570-711-11	s	SWITCH, SLIDE
T401	1-426-994-21	s	TRANSFORMER, DC-DC CONVERTER
X101	1-760-435-11	s	CRYSTAL 18.00MHz

AU-231 BOARD

Ref. No. or Q'ty	Part No.	SP	Description
1pc	A-8277-380-A	o	MOUNTED CIRCUIT BOARD, AU-231
1pc	3-697-757-03	o	PANEL,AU
1pc	2-251-622-01	o	LEVER, PC BOARD
4pcs	7-682-903-01	s	SCREW +PWH 3X5
3pcs	3-719-381-11	s	SCREW (M2X5)
1pc	3-697-870-02	o	INSULATER,BOARD
C1	1-163-038-00	s	CERAMIC, CHIP 0.1uF 25V
C2	1-163-038-00	s	CERAMIC, CHIP 0.1uF 25V
C3	1-163-038-00	s	CERAMIC, CHIP 0.1uF 25V
C4	1-163-377-11	s	CERAMIC, CHIP 100PF 5% 50V
C5	1-163-367-11	s	CERAMIC, CHIP 39PF 5% 50V
C6	1-163-115-00	s	CERAMIC, CHIP 82PF 5% 50V
C7	1-163-131-00	s	CERAMIC, CHIP 390PF 5% 50V
C8	1-163-038-00	s	CERAMIC, CHIP 0.1uF 25V
C9	1-163-253-11	s	CERAMIC 120PF 5% 50V
C10	1-126-390-11	s	ELECT, CHIP 22uF 20% 6.3V
C20	1-163-275-11	s	CERAMIC 0.001uF 5% 50V
C21	1-163-038-00	s	CERAMIC, CHIP 0.1uF 25V
C22	1-163-038-00	s	CERAMIC, CHIP 0.1uF 25V
C23	1-163-038-00	s	CERAMIC, CHIP 0.1uF 25V
C24	1-163-111-00	s	CERAMIC, CHIP 56PF 5% 50V
C25	1-163-377-11	s	CERAMIC, CHIP 100PF 5% 50V
C26	1-163-131-00	s	CERAMIC, CHIP 390PF 5% 50V
C27	1-163-038-00	s	CERAMIC, CHIP 0.1uF 25V
C28	1-163-113-00	s	CERAMIC, CHIP 68PF 5% 50V
C29	1-163-038-00	s	CERAMIC, CHIP 0.1uF 25V
C30	1-163-989-11	s	CERAMIC, CHIP 0.033uF 10% 25V
C31	1-163-275-11	s	CERAMIC 0.001uF 5% 50V
C32	1-126-390-11	s	ELECT, CHIP 22uF 20% 6.3V
C41	1-163-038-00	s	CERAMIC, CHIP 0.1uF 25V
C42	1-163-038-00	s	CERAMIC, CHIP 0.1uF 25V
C43	1-163-377-11	s	CERAMIC, CHIP 100PF 5% 50V
C45	1-163-131-00	s	CERAMIC, CHIP 390PF 5% 50V
C46	1-163-038-00	s	CERAMIC, CHIP 0.1uF 25V
C47	1-163-113-00	s	CERAMIC, CHIP 68PF 5% 50V
C48	1-163-038-00	s	CERAMIC, CHIP 0.1uF 25V
C49	1-135-177-21	s	TANTALUM, CHIP 1uF 10% 25V
C50	1-126-390-11	s	ELECT, CHIP 22uF 20% 6.3V
C61	1-163-038-00	s	CERAMIC, CHIP 0.1uF 25V
C62	1-163-038-00	s	CERAMIC, CHIP 0.1uF 25V
C63	1-163-377-11	s	CERAMIC, CHIP 100PF 5% 50V
C64	1-163-227-11	s	CERAMIC, CHIP 10PF 5% 50V
C65	1-163-131-00	s	CERAMIC, CHIP 390PF 5% 50V
C66	1-163-038-00	s	CERAMIC, CHIP 0.1uF 25V
C67	1-163-113-00	s	CERAMIC, CHIP 68PF 5% 50V
C69	1-135-177-21	s	TANTALUM, CHIP 1uF 10% 25V
C70	1-126-390-11	s	ELECT, CHIP 22uF 20% 6.3V
C81	1-163-038-00	s	CERAMIC, CHIP 0.1uF 25V
C82	1-163-222-11	s	CERAMIC 5PF 0.25PF 50V
C83	1-163-038-00	s	CERAMIC, CHIP 0.1uF 25V
C84	1-126-390-11	s	ELECT, CHIP 22uF 20% 6.3V
C85	1-163-038-00	s	CERAMIC, CHIP 0.1uF 25V
C86	1-163-038-00	s	CERAMIC, CHIP 0.1uF 25V
C87	1-163-038-00	s	CERAMIC, CHIP 0.1uF 25V
C88	1-163-038-00	s	CERAMIC, CHIP 0.1uF 25V
C89	1-126-390-11	s	ELECT, CHIP 22uF 20% 6.3V
C105	1-163-038-00	s	CERAMIC, CHIP 0.1uF 25V
C106	1-163-038-00	s	CERAMIC, CHIP 0.1uF 25V

(AU-231 BOARD)

Ref. No. or Q'ty	Part No.	SP	Description
C107	1-163-038-00	s	CERAMIC, CHIP 0.1uF 25V
C108	1-163-241-11	s	CERAMIC, CHIP 39PF 5% 50V
C109	1-163-231-11	s	CERAMIC, CHIP 15PF 5% 50V
C110	1-164-232-11	s	CERAMIC, CHIP 0.01uF 10% 50V
C111	1-164-232-11	s	CERAMIC, CHIP 0.01uF 10% 50V
C112	1-163-038-00	s	CERAMIC, CHIP 0.1uF 25V
C113	1-135-091-00	s	TANTALUM, CHIP 1uF 20% 16V
C114	1-126-391-11	s	ELECT 47uF 20% 6.3V
C115	1-163-125-00	s	CERAMIC, CHIP 220PF 5% 50V
C116	1-163-263-11	s	CERAMIC, CHIP 330PF 5% 50V
C117	1-163-245-11	s	CERAMIC, CHIP 56PF 5% 50V
C118	1-164-695-11	s	CERAMIC 0.0022uF 5% 50V
C119	1-164-695-11	s	CERAMIC 0.0022uF 5% 50V
C120	1-164-695-11	s	CERAMIC 0.0022uF 5% 50V
C122	1-126-390-11	s	ELECT, CHIP 22uF 20% 6.3V
C123	1-135-091-00	s	TANTALUM, CHIP 1uF 20% 16V
C124	1-135-091-00	s	TANTALUM, CHIP 1uF 20% 16V
C125	1-163-038-00	s	CERAMIC, CHIP 0.1uF 25V
C126	1-164-005-11	s	CERAMIC, CHIP 0.47uF 25V
C127	1-163-989-11	s	CERAMIC, CHIP 0.033uF 10% 25V
C128	1-163-137-00	s	CERAMIC, CHIP 680PF 5% 50V
C129	1-104-913-11	s	TANTALUM, CHIP 10uF 20% 16V
C130	1-164-695-11	s	CERAMIC 0.0022uF 5% 50V
C131	1-164-695-11	s	CERAMIC 0.0022uF 5% 50V
C132	1-164-695-11	s	CERAMIC 0.0022uF 5% 50V
C133	1-135-181-21	s	TANTALUM, CHIP 4.7uF 10% 6.3V
C134	1-135-259-11	s	TANTALUM, CHIP 10uF 20% 6.3V
C135	1-104-752-11	s	TANTALUM, CHIP 33uF 20% 6.3V
C136	1-126-390-11	s	ELECT, CHIP 22uF 20% 6.3V
C137	1-126-390-11	s	ELECT, CHIP 22uF 20% 6.3V
C138	1-128-414-21	s	ELECT 220uF 20% 6.3V
C139	1-164-695-11	s	CERAMIC 0.0022uF 5% 50V
C140	1-164-695-11	s	CERAMIC 0.0022uF 5% 50V
C141	1-164-695-11	s	CERAMIC 0.0022uF 5% 50V
C142	1-164-695-11	s	CERAMIC 0.0022uF 5% 50V
C143	1-163-037-11	s	CERAMIC, CHIP 0.022uF 10% 25V
C144	1-163-038-00	s	CERAMIC, CHIP 0.1uF 25V
C145	1-163-038-00	s	CERAMIC, CHIP 0.1uF 25V
C151	1-163-038-00	s	CERAMIC, CHIP 0.1uF 25V
C152	1-126-390-11	s	ELECT, CHIP 22uF 20% 6.3V
C153	1-163-038-00	s	CERAMIC, CHIP 0.1uF 25V
C154	1-163-038-00	s	CERAMIC, CHIP 0.1uF 25V
C155	1-163-038-00	s	CERAMIC, CHIP 0.1uF 25V
C156	1-135-091-00	s	TANTALUM, CHIP 1uF 20% 16V
C157	1-163-038-00	s	CERAMIC, CHIP 0.1uF 25V
C158	1-126-390-11	s	ELECT, CHIP 22uF 20% 6.3V
C159	1-135-091-00	s	TANTALUM, CHIP 1uF 20% 16V
C160	1-128-414-21	s	ELECT 220uF 20% 6.3V
C161	1-163-239-11	s	CERAMIC, CHIP 33PF 5% 50V
C162	1-135-070-00	s	TANTALUM, CHIP 0.1uF 10% 35V
C163	1-135-070-00	s	TANTALUM, CHIP 0.1uF 10% 35V
C164	1-163-038-00	s	CERAMIC, CHIP 0.1uF 25V
C165	1-163-131-00	s	CERAMIC, CHIP 390PF 5% 50V
C166	1-126-390-11	s	ELECT, CHIP 22uF 20% 6.3V
C167	1-164-695-11	s	CERAMIC 0.0022uF 5% 50V
C168	1-163-011-11	s	CERAMIC, CHIP 0.0015uF 10% 50V
C205	1-163-038-00	s	CERAMIC, CHIP 0.1uF 25V
C206	1-126-390-11	s	ELECT, CHIP 22uF 20% 6.3V
C207	1-163-038-00	s	CERAMIC, CHIP 0.1uF 25V

(AU-231 BOARD)

Ref. No. or Q'ty	Part No.	SP	Description
C208	1-163-038-00	s	CERAMIC, CHIP 0.1uF 25V
C209	1-163-038-00	s	CERAMIC, CHIP 0.1uF 25V
C210	1-135-091-00	s	TANTALUM, CHIP 1uF 20% 16V
C211	1-163-038-00	s	CERAMIC, CHIP 0.1uF 25V
C212	1-126-390-11	s	ELECT, CHIP 22uF 20% 6.3V
C213	1-135-070-00	s	TANTALUM, CHIP 0.1uF 10% 35V
C214	1-135-091-00	s	TANTALUM, CHIP 1uF 20% 16V
C215	1-128-414-21	s	ELECT 220uF 20% 6.3V
C216	1-135-070-00	s	TANTALUM, CHIP 0.1uF 10% 35V
C217	1-164-695-11	s	CERAMIC 0.0022uF 5% 50V
C218	1-163-038-00	s	CERAMIC, CHIP 0.1uF 25V
C219	1-163-131-00	s	CERAMIC, CHIP 390PF 5% 50V
C220	1-135-091-00	s	TANTALUM, CHIP 1uF 20% 16V
C221	1-126-390-11	s	ELECT, CHIP 22uF 20% 6.3V
C224	1-126-395-11	s	ELECT 22uF 20% 16V
C225	1-126-395-11	s	ELECT 22uF 20% 16V
C226	1-163-125-00	s	CERAMIC, CHIP 220PF 5% 50V
C251	1-163-038-00	s	CERAMIC, CHIP 0.1uF 25V
C252	1-126-390-11	s	ELECT, CHIP 22uF 20% 6.3V
C253	1-163-038-00	s	CERAMIC, CHIP 0.1uF 25V
C254	1-163-038-00	s	CERAMIC, CHIP 0.1uF 25V
C255	1-163-038-00	s	CERAMIC, CHIP 0.1uF 25V
C256	1-135-091-00	s	TANTALUM, CHIP 1uF 20% 16V
C257	1-163-038-00	s	CERAMIC, CHIP 0.1uF 25V
C258	1-126-390-11	s	ELECT, CHIP 22uF 20% 6.3V
C259	1-135-091-00	s	TANTALUM, CHIP 1uF 20% 16V
C260	1-135-070-00	s	TANTALUM, CHIP 0.1uF 10% 35V
C261	1-128-414-21	s	ELECT 220uF 20% 6.3V
C262	1-135-070-00	s	TANTALUM, CHIP 0.1uF 10% 35V
C263	1-163-038-00	s	CERAMIC, CHIP 0.1uF 25V
C264	1-164-695-11	s	CERAMIC 0.0022uF 5% 50V
C265	1-163-131-00	s	CERAMIC, CHIP 390PF 5% 50V
C266	1-126-390-11	s	ELECT, CHIP 22uF 20% 6.3V
C267	1-135-091-00	s	TANTALUM, CHIP 1uF 20% 16V
C268	1-163-125-00	s	CERAMIC, CHIP 220PF 5% 50V
C269	1-126-395-11	s	ELECT 22uF 20% 16V
C270	1-126-395-11	s	ELECT 22uF 20% 16V
C301	1-104-478-11	s	TANTAL 10uF 20% 35V
C302	1-126-396-11	s	ELECT, CHIP 47uF 20% 16V
C303	1-104-823-11	s	TANTALUM, CHIP 47uF 20% 16V
C304	1-126-391-11	s	ELECT 47uF 20% 6.3V
C305	1-104-823-11	s	TANTALUM, CHIP 47uF 20% 16V
C306	1-126-391-11	s	ELECT 47uF 20% 6.3V
C307	1-104-478-11	s	TANTAL 10uF 20% 35V
C308	1-126-396-11	s	ELECT, CHIP 47uF 20% 16V
C309	1-135-125-21	s	TANTAL 33uF 20% 10V
C310	1-135-125-21	s	TANTAL 33uF 20% 10V
C311	1-135-125-21	s	TANTAL 33uF 20% 10V
C312	1-135-164-21	s	TANTALUM, CHIP 22uF 20% 10V
C313	1-135-164-21	s	TANTALUM, CHIP 22uF 20% 10V
C314	1-126-390-11	s	ELECT, CHIP 22uF 20% 6.3V
C315	1-135-161-21	s	TANTALUM, CHIP 22uF 10% 10V
C316	1-107-686-11	s	CHIP, TANTALUM 4.7uF 20% 16V
C317	1-126-398-11	s	ELECT, CHIP 4.7uF 20% 35V
C318	1-126-398-11	s	ELECT, CHIP 4.7uF 20% 35V
C319	1-126-401-11	s	ELECT, CHIP 1uF 20% 50V
C320	1-126-401-11	s	ELECT, CHIP 1uF 20% 50V
C351	1-126-390-11	s	ELECT, CHIP 22uF 20% 6.3V
C352	1-126-390-11	s	ELECT, CHIP 22uF 20% 6.3V

(AU-231 BOARD)

Ref. No. or Q'ty	Part No.	SP	Description
C401	1-126-390-11	s	ELECT, CHIP 22uF 20% 6.3V
C402	1-126-390-11	s	ELECT, CHIP 22uF 20% 6.3V
C451	1-163-017-00	s	CERAMIC, CHIP 0.0047uF 5% 50V
C452	1-126-390-11	s	ELECT, CHIP 22uF 20% 6.3V
C453	1-126-390-11	s	ELECT, CHIP 22uF 20% 6.3V
C454	1-163-017-00	s	CERAMIC, CHIP 0.0047uF 5% 50V
C501	1-126-390-11	s	ELECT, CHIP 22uF 20% 6.3V
C502	1-126-390-11	s	ELECT, CHIP 22uF 20% 6.3V
C503	1-126-390-11	s	ELECT, CHIP 22uF 20% 6.3V
C504	1-126-390-11	s	ELECT, CHIP 22uF 20% 6.3V
C505	1-163-137-00	s	CERAMIC, CHIP 680PF 5% 50V
C506	1-163-137-00	s	CERAMIC, CHIP 680PF 5% 50V
C507	1-126-391-11	s	ELECT 47uF 20% 6.3V
C508	1-126-391-11	s	ELECT 47uF 20% 6.3V
C509	1-128-416-11	s	ELECT 100uF 20% 16V
C510	1-128-416-11	s	ELECT 100uF 20% 16V
C511	1-128-416-11	s	ELECT 100uF 20% 16V
C512	1-128-416-11	s	ELECT 100uF 20% 16V
C513	1-126-396-11	s	ELECT, CHIP 47uF 20% 16V
C601	1-135-155-21	s	TANTALUM, CHIP 4.7uF 10% 16V
C602	1-135-155-21	s	TANTALUM, CHIP 4.7uF 10% 16V
C603	1-126-395-11	s	ELECT 22uF 20% 16V
C604	1-126-395-11	s	ELECT 22uF 20% 16V
C605	1-107-910-11	s	ELECT 100uF 20% 50V
C606	1-126-395-11	s	ELECT 22uF 20% 16V
C607	1-126-395-11	s	ELECT 22uF 20% 16V
C608	1-128-416-11	s	ELECT 100uF 20% 16V
C609	1-128-416-11	s	ELECT 100uF 20% 16V
C701	1-135-155-21	s	TANTALUM, CHIP 4.7uF 10% 16V
C702	1-135-155-21	s	TANTALUM, CHIP 4.7uF 10% 16V
C703	1-126-395-11	s	ELECT 22uF 20% 16V
C704	1-126-395-11	s	ELECT 22uF 20% 16V
C705	1-107-910-11	s	ELECT 100uF 20% 50V
C706	1-126-395-11	s	ELECT 22uF 20% 16V
C707	1-126-395-11	s	ELECT 22uF 20% 16V
C708	1-128-416-11	s	ELECT 100uF 20% 16V
C709	1-128-416-11	s	ELECT 100uF 20% 16V
C901	1-126-390-11	s	ELECT, CHIP 22uF 20% 6.3V
C902	1-163-038-00	s	CERAMIC, CHIP 0.1uF 25V
C903	1-163-038-00	s	CERAMIC, CHIP 0.1uF 25V
C904	1-163-037-11	s	CERAMIC, CHIP 0.022uF 10% 25V
C905	1-126-391-11	s	ELECT 47uF 20% 6.3V
C906	1-126-391-11	s	ELECT 47uF 20% 6.3V
C907	1-163-038-00	s	CERAMIC, CHIP 0.1uF 25V
CF41	1-760-443-11	s	FILTER, CERAMIC 3.600MHz
CF61	1-760-445-11	s	FILTER, CERAMIC 4.300MHz
CF101	1-760-446-11	s	FILTER, CERAMIC 5.600MHz
CF102	1-760-446-11	s	FILTER, CERAMIC 5.600MHz
CF151	1-578-068-12	s	FILTER, CERAMIC 7.100MHz
CF152	1-578-068-12	s	FILTER, CERAMIC 7.100MHz
CF201	1-760-447-12	s	FILTER, CERAMIC
CF202	1-760-447-12	s	FILTER, CERAMIC
CF251	1-578-067-11	s	FILTER, CERAMIC 6.700MHz
CF252	1-578-067-11	s	FILTER, CERAMIC 6.700MHz
D1	8-719-820-41	s	DIODE 1SS302
D2	8-719-041-39	s	DIODE KV1470
D21	8-719-820-41	s	DIODE 1SS302
D22	8-719-041-39	s	DIODE KV1470
D23	8-719-820-41	s	DIODE 1SS302

(AU-231 BOARD)

Ref. No. or Q'ty	Part No.	SP	Description
D41	8-719-820-41	s	DIODE 1SS302
D42	8-719-041-39	s	DIODE KV1470
D43	8-719-820-41	s	DIODE 1SS302
D61	8-719-820-41	s	DIODE 1SS302
D62	8-719-041-39	s	DIODE KV1470
D63	8-719-820-41	s	DIODE 1SS302
D81	8-719-911-19	s	DIODE 1SS119
D82	8-719-911-19	s	DIODE 1SS119
D201	8-719-029-64	s	DIODE RD4.7UH-T1
D202	8-719-024-81	s	DIODE 1SS300-TE85L
D251	8-719-029-64	s	DIODE RD4.7UH-T1
D301	8-719-029-75	s	DIODE RD12UJN-T1
D302	8-719-029-67	s	DIODE RD5.6UJN-T1
D303	8-719-029-75	s	DIODE RD12UJN-T1
D304	8-719-029-67	s	DIODE RD5.6UJN-T1
D305	8-719-029-62	s	DIODE RD3.9UH-T1
D306	8-719-029-62	s	DIODE RD3.9UH-T1
D307	8-759-274-67	s	IC LM4040BIM3X-5.0
D308	8-719-029-73	s	DIODE RD10UJN-T1
D309	8-719-029-73	s	DIODE RD10UJN-T1
D310	8-719-820-41	s	DIODE 1SS302
D311	8-719-974-39	s	DIODE HLMP-6300-010
D401	8-719-029-55	s	DIODE RD2.0UH-T1
D402	8-719-029-55	s	DIODE RD2.0UH-T1
D451	8-719-029-55	s	DIODE RD2.0UH-T1
D452	8-719-029-55	s	DIODE RD2.0UH-T1
D501	8-719-024-81	s	DIODE 1SS300-TE85L
D601	8-719-024-81	s	DIODE 1SS300-TE85L
D602	8-719-024-81	s	DIODE 1SS300-TE85L
D701	8-719-024-81	s	DIODE 1SS300-TE85L
D702	8-719-024-81	s	DIODE 1SS300-TE85L
D901	8-719-404-35	s	DIODE MA141WK
D902	8-719-404-35	s	DIODE MA141WK
D903	8-719-404-35	s	DIODE MA141WK
D904	8-719-404-35	s	DIODE MA141WK
D905	8-719-404-35	s	DIODE MA141WK
FL1	1-239-940-11	s	FILTER, BAND PASS 2.5MHz
FL21	1-239-941-11	s	FILTER, BAND PASS 3.0MHz
FL81	1-417-189-11	s	SEPARATOR
IC81	8-759-054-61	s	IC CLC505AJE
IC82	8-759-988-13	s	IC LM393PS
IC101	8-759-271-14	s	IC TA8129Z
IC102	8-759-173-16	s	IC TL062CPW
IC103	8-759-085-67	s	IC LM339NS
IC104	8-759-173-16	s	IC TL062CPW
IC105	8-759-710-52	s	IC NJM567M
IC151	8-759-812-35	s	IC LA1235
IC152	8-759-173-16	s	IC TL062CPW
IC201	8-759-812-35	s	IC LA1235
IC202	8-759-173-16	s	IC TL062CPW
IC203	8-759-745-64	s	IC NJM4560M
IC251	8-759-812-35	s	IC LA1235
IC252	8-759-173-16	s	IC TL062CPW
IC253	8-759-745-64	s	IC NJM4560M
IC301	8-759-173-16	s	IC TL062CPW
IC302	8-759-173-16	s	IC TL062CPW
IC401	8-759-076-06	s	IC TL064CPW
IC402	8-759-009-07	s	IC MC14053BF

(AU-231 BOARD)

Ref. No. or Q'ty	Part No.	SP	Description
IC403	8-759-009-07	s	IC MC14053BF
IC404	8-759-076-06	s	IC TL064CPW
IC451	8-759-076-06	s	IC TL064CPW
IC452	8-759-082-61	s	IC TC4W53FU
IC501	8-759-009-07	s	IC MC14053BF
IC502	8-759-173-16	s	IC TL062CPW
IC503	8-759-009-07	s	IC MC14053BF
IC504	8-759-634-16	s	IC M5207L01
IC505	8-759-173-16	s	IC TL062CPW
IC506	8-759-009-07	s	IC MC14053BF
IC507	8-759-009-07	s	IC MC14053BF
IC508	8-759-349-19	s	IC NJM3414AM-TE2
IC601	8-759-009-07	s	IC MC14053BF
IC602	8-759-173-16	s	IC TL062CPW
IC603	8-759-173-16	s	IC TL062CPW
IC604	8-759-745-64	s	IC NJM4560M
IC605	8-759-745-64	s	IC NJM4560M
IC701	8-759-009-07	s	IC MC14053BF
IC702	8-759-173-16	s	IC TL062CPW
IC703	8-759-173-16	s	IC TL062CPW
IC704	8-759-745-64	s	IC NJM4560M
IC705	8-759-745-64	s	IC NJM4560M
IC901	8-759-926-25	s	IC SN74HC165ANS
IC902	8-759-147-84	s	IC CXD8072Q
IC903	8-759-344-36	s	IC MC14538BFEL
IC904	8-759-927-46	s	IC SN74HC00ANS
IC905	8-759-239-23	s	IC SN74HC86NS
IC906	8-759-927-46	s	IC SN74HC00ANS
IC907	8-759-926-17	s	IC SN74HC153ANS
L1	1-412-029-11	s	INDUCTOR CHIP 10uH
L21	1-412-029-11	s	INDUCTOR CHIP 10uH
L41	1-412-029-11	s	INDUCTOR CHIP 10uH
L61	1-412-029-11	s	INDUCTOR CHIP 10uH
L81	1-412-029-11	s	INDUCTOR CHIP 10uH
L82	1-412-029-11	s	INDUCTOR CHIP 10uH
L101	1-412-029-11	s	INDUCTOR CHIP 10uH
L102	1-412-029-11	s	INDUCTOR CHIP 10uH
L151	1-412-029-11	s	INDUCTOR CHIP 10uH
L152	1-412-029-11	s	INDUCTOR CHIP 10uH
L153	1-410-148-11	s	MICRO INDUCTOR 33uH
L201	1-412-029-11	s	INDUCTOR CHIP 10uH
L202	1-412-029-11	s	INDUCTOR CHIP 10uH
L203	1-410-148-11	s	MICRO INDUCTOR 33uH
L251	1-412-029-11	s	INDUCTOR CHIP 10uH
L252	1-412-029-11	s	INDUCTOR CHIP 10uH
L253	1-410-148-11	s	MICRO INDUCTOR 33uH
L301	1-411-227-21	s	COIL, CHOKE 100UH
L302	1-411-227-21	s	COIL, CHOKE 100UH
L303	1-411-227-21	s	COIL, CHOKE 100UH
L304	1-411-227-21	s	COIL, CHOKE 100UH
L351	1-412-030-11	s	INDUCTOR CHIP 22uH
L352	1-412-030-11	s	INDUCTOR CHIP 22uH
L501	1-412-030-11	s	INDUCTOR CHIP 22uH
L901	1-412-030-11	s	INDUCTOR CHIP 22uH
LV1	1-459-890-11	s	COIL, VARIABLE
LV21	1-459-890-11	s	COIL, VARIABLE
LV41	1-459-890-11	s	COIL, VARIABLE
LV61	1-459-889-11	s	COIL, VARIABLE
LV101	1-459-890-11	s	COIL, VARIABLE

(AU-231 BOARD)

Ref. No. or Q'ty	Part No.	SP	Description
Q1	8-729-117-32	s	TRANSISTOR 2SC4177
Q2	8-729-117-32	s	TRANSISTOR 2SC4177
Q21	8-729-117-32	s	TRANSISTOR 2SC4177
Q22	8-729-117-32	s	TRANSISTOR 2SC4177
Q41	8-729-117-32	s	TRANSISTOR 2SC4177
Q42	8-729-117-32	s	TRANSISTOR 2SC4177
Q61	8-729-117-32	s	TRANSISTOR 2SC4177
Q62	8-729-117-32	s	TRANSISTOR 2SC4177
Q81	8-729-117-32	s	TRANSISTOR 2SC4177
Q82	8-729-117-16	s	TRANSISTOR 2SA1611-M6
Q104	8-729-117-32	s	TRANSISTOR 2SC4177
Q105	8-729-117-32	s	TRANSISTOR 2SC4177
Q301	8-729-117-32	s	TRANSISTOR 2SC4177
Q302	8-729-117-32	s	TRANSISTOR 2SC4177
Q303	8-729-117-16	s	TRANSISTOR 2SA1611-M6
Q304	8-729-117-16	s	TRANSISTOR 2SA1611-M6
Q305	8-729-101-07	s	TRANSISTOR 2SB798
Q306	8-729-807-51	s	TRANSISTOR 2SD1623-S
Q307	8-729-101-07	s	TRANSISTOR 2SB798
Q308	8-729-807-51	s	TRANSISTOR 2SD1623-S
Q309	8-729-117-32	s	TRANSISTOR 2SC4177
Q310	8-729-117-16	s	TRANSISTOR 2SA1611-M6
Q601	8-729-117-16	s	TRANSISTOR 2SA1611-M6
Q602	8-729-117-32	s	TRANSISTOR 2SC4177
Q603	8-729-117-32	s	TRANSISTOR 2SC4177
Q604	8-729-117-16	s	TRANSISTOR 2SA1611-M6
Q605	8-729-117-32	s	TRANSISTOR 2SC4177
Q606	8-729-117-32	s	TRANSISTOR 2SC4177
Q701	8-729-117-16	s	TRANSISTOR 2SA1611-M6
Q702	8-729-117-32	s	TRANSISTOR 2SC4177
Q703	8-729-117-32	s	TRANSISTOR 2SC4177
Q704	8-729-117-16	s	TRANSISTOR 2SA1611-M6
Q705	8-729-117-32	s	TRANSISTOR 2SC4177
Q706	8-729-117-32	s	TRANSISTOR 2SC4177
R1	1-216-651-11	s	METAL, CHIP 1K 0.5% 1/10W
R2	1-216-651-11	s	METAL, CHIP 1K 0.5% 1/10W
R3	1-216-659-11	s	METAL, CHIP 2.2K 0.5% 1/10W
R4	1-216-671-11	s	METAL, CHIP 6.8K 0.50% 1/10W
R5	1-216-681-11	s	METAL, CHIP 18K 0.5% 1/10W
R6	1-216-675-11	s	METAL, CHIP 10K 0.5% 1/10W
R7	1-216-651-11	s	METAL, CHIP 1K 0.5% 1/10W
R8	1-216-683-11	s	METAL, CHIP 22K 0.50% 1/10W
R9	1-216-675-11	s	METAL, CHIP 10K 0.5% 1/10W
R10	1-216-683-11	s	METAL, CHIP 22K 0.50% 1/10W
R11	1-216-691-11	s	METAL, CHIP 47K 0.50% 1/10W
R12	1-216-679-11	s	METAL, CHIP 15K 0.5% 1/10W
R13	1-216-691-11	s	METAL, CHIP 47K 0.50% 1/10W
R21	1-216-651-11	s	METAL, CHIP 1K 0.5% 1/10W
R22	1-216-651-11	s	METAL, CHIP 1K 0.5% 1/10W
R23	1-216-659-11	s	METAL, CHIP 2.2K 0.5% 1/10W
R24	1-216-671-11	s	METAL, CHIP 6.8K 0.50% 1/10W
R25	1-216-681-11	s	METAL, CHIP 18K 0.5% 1/10W
R26	1-216-659-11	s	METAL, CHIP 2.2K 0.5% 1/10W
R27	1-216-651-11	s	METAL, CHIP 1K 0.5% 1/10W
R28	1-216-683-11	s	METAL, CHIP 22K 0.50% 1/10W
R29	1-216-671-11	s	METAL, CHIP 6.8K 0.50% 1/10W
R30	1-216-683-11	s	METAL, CHIP 22K 0.50% 1/10W
R31	1-216-677-11	s	METAL, CHIP 12K 0.5% 1/10W

(AU-231 BOARD)

Ref. No. or Q'ty	Part No.	SP	Description
R32	1-216-699-11	s	METAL, CHIP 100K 0.50% 1/10W
R33	1-216-674-11	s	METAL, CHIP 9.1K 0.5% 1/10W
R34	1-216-656-11	s	METAL 1.6K 0.50% 1/10W
R35	1-216-689-11	s	METAL, CHIP 39K 0.5% 1/10W
R41	1-216-651-11	s	METAL, CHIP 1K 0.5% 1/10W
R42	1-216-651-11	s	METAL, CHIP 1K 0.5% 1/10W
R43	1-216-659-11	s	METAL, CHIP 2.2K 0.5% 1/10W
R44	1-216-671-11	s	METAL, CHIP 6.8K 0.50% 1/10W
R45	1-216-681-11	s	METAL, CHIP 18K 0.5% 1/10W
R46	1-216-662-11	s	METAL 3K 0.50% 1/10W
R47	1-216-651-11	s	METAL, CHIP 1K 0.5% 1/10W
R48	1-216-683-11	s	METAL, CHIP 22K 0.50% 1/10W
R49	1-216-671-11	s	METAL, CHIP 6.8K 0.50% 1/10W
R50	1-216-683-11	s	METAL, CHIP 22K 0.50% 1/10W
R51	1-216-675-11	s	METAL, CHIP 10K 0.5% 1/10W
R52	1-216-677-11	s	METAL, CHIP 12K 0.5% 1/10W
R53	1-216-699-11	s	METAL, CHIP 100K 0.50% 1/10W
R54	1-216-674-11	s	METAL, CHIP 9.1K 0.5% 1/10W
R55	1-216-669-11	s	METAL, CHIP 5.6K 0.5% 1/10W
R61	1-216-651-11	s	METAL, CHIP 1K 0.5% 1/10W
R62	1-216-651-11	s	METAL, CHIP 1K 0.5% 1/10W
R63	1-216-659-11	s	METAL, CHIP 2.2K 0.5% 1/10W
R64	1-216-671-11	s	METAL, CHIP 6.8K 0.50% 1/10W
R65	1-216-681-11	s	METAL, CHIP 18K 0.5% 1/10W
R66	1-216-660-11	s	METAL 2.4K 0.50% 1/10W
R67	1-216-651-11	s	METAL, CHIP 1K 0.5% 1/10W
R68	1-216-683-11	s	METAL, CHIP 22K 0.50% 1/10W
R69	1-216-671-11	s	METAL, CHIP 6.8K 0.50% 1/10W
R70	1-216-683-11	s	METAL, CHIP 22K 0.50% 1/10W
R71	1-216-675-11	s	METAL, CHIP 10K 0.5% 1/10W
R72	1-216-677-11	s	METAL, CHIP 12K 0.5% 1/10W
R73	1-216-699-11	s	METAL, CHIP 100K 0.50% 1/10W
R74	1-216-674-11	s	METAL, CHIP 9.1K 0.5% 1/10W
R75	1-216-669-11	s	METAL, CHIP 5.6K 0.5% 1/10W
R81	1-247-804-11	s	CARBON 75 5% 1/4W
R82	1-216-627-11	s	METAL, CHIP 100 0.50% 1/10W
R83	1-218-756-11	s	METAL 150K 0.50% 1/10W
R84	1-216-627-11	s	METAL, CHIP 100 0.50% 1/10W
R85	1-216-643-11	s	METAL, CHIP 470 0.5% 1/10W
R86	1-216-699-11	s	METAL, CHIP 100K 0.50% 1/10W
R87	1-216-699-11	s	METAL, CHIP 100K 0.50% 1/10W
R88	1-216-691-11	s	METAL, CHIP 47K 0.50% 1/10W
R89	1-216-691-11	s	METAL, CHIP 47K 0.50% 1/10W
R90	1-216-697-91	s	METAL, CHIP 82K 0.50% 1/10W
R91	1-216-699-11	s	METAL, CHIP 100K 0.50% 1/10W
R92	1-216-658-11	s	METAL, CHIP 2K 0.5% 1/10W
R93	1-216-699-11	s	METAL, CHIP 100K 0.50% 1/10W
R101	1-216-646-11	s	METAL, CHIP 620 0.5% 1/10W
R108	1-216-646-11	s	METAL, CHIP 620 0.5% 1/10W
R109	1-216-653-11	s	METAL, CHIP 1.2K 0.50% 1/10W
R111	1-216-675-11	s	METAL, CHIP 10K 0.5% 1/10W
R112	1-216-667-11	s	METAL, CHIP 4.7K 0.5% 1/10W
R113	1-216-679-11	s	METAL, CHIP 15K 0.5% 1/10W
R114	1-216-653-11	s	METAL, CHIP 1.2K 0.50% 1/10W
R115	1-216-677-11	s	METAL, CHIP 12K 0.5% 1/10W
R116	1-216-657-11	s	METAL, CHIP 1.8K 0.5% 1/10W
R117	1-216-668-11	s	METAL, CHIP 5.1K 0.5% 1/10W
R118	1-216-668-11	s	METAL, CHIP 5.1K 0.5% 1/10W
R119	1-216-675-11	s	METAL, CHIP 10K 0.5% 1/10W

(AU-231 BOARD)

Ref. No. or Q'ty	Part No.	SP	Description
R120	1-216-679-11	s	METAL, CHIP 15K 0.5% 1/10W
R121	1-218-761-11	s	METAL 240K 0.50% 1/10W
R123	1-216-688-11	s	METAL, CHIP 36K 0.50% 1/10W
R124	1-216-685-11	s	METAL, CHIP 27K 0.5% 1/10W
R125	1-216-649-11	s	METAL, CHIP 820 0.50% 1/10W
R126	1-216-675-11	s	METAL, CHIP 10K 0.5% 1/10W
R127	1-216-675-11	s	METAL, CHIP 10K 0.5% 1/10W
R128	1-216-649-11	s	METAL, CHIP 820 0.50% 1/10W
R129	1-216-685-11	s	METAL, CHIP 27K 0.5% 1/10W
R130	1-216-675-11	s	METAL, CHIP 10K 0.5% 1/10W
R131	1-216-691-11	s	METAL, CHIP 47K 0.50% 1/10W
R132	1-216-696-11	s	METAL 75K 0.50% 1/10W
R133	1-216-696-11	s	METAL 75K 0.50% 1/10W
R134	1-216-696-11	s	METAL 75K 0.50% 1/10W
R135	1-216-627-11	s	METAL, CHIP 100 0.50% 1/10W
R136	1-218-770-11	s	METAL, CHIP 560K 0.50% 1/10W
R137	1-216-699-11	s	METAL, CHIP 100K 0.50% 1/10W
R138	1-216-683-11	s	METAL, CHIP 22K 0.50% 1/10W
R139	1-216-683-11	s	METAL, CHIP 22K 0.50% 1/10W
R140	1-216-675-11	s	METAL, CHIP 10K 0.5% 1/10W
R141	1-218-768-11	s	METAL 470K 0.50% 1/10W
R142	1-216-603-11	s	METAL, CHIP 10 0.50% 1/10W
R151	1-216-643-11	s	METAL, CHIP 470 0.5% 1/10W
R152	1-216-643-11	s	METAL, CHIP 470 0.5% 1/10W
R153	1-216-671-11	s	METAL, CHIP 6.8K 0.50% 1/10W
R154	1-216-685-11	s	METAL, CHIP 27K 0.5% 1/10W
R155	1-216-695-11	s	METAL, CHIP 68K 0.50% 1/10W
R156	1-216-665-11	s	METAL, CHIP 3.9K 0.5% 1/10W
R157	1-216-675-11	s	METAL, CHIP 10K 0.5% 1/10W
R158	1-216-661-11	s	METAL, CHIP 2.7K 0.5% 1/10W
R159	1-216-663-11	s	METAL, CHIP 3.3K 0.5% 1/10W
R160	1-216-685-11	s	METAL, CHIP 27K 0.5% 1/10W
R161	1-216-695-11	s	METAL, CHIP 68K 0.50% 1/10W
R162	1-216-682-11	s	METAL, CHIP 20K 0.5% 1/10W
R163	1-216-682-11	s	METAL, CHIP 20K 0.5% 1/10W
R164	1-216-671-11	s	METAL, CHIP 6.8K 0.50% 1/10W
R165	1-216-677-11	s	METAL, CHIP 12K 0.5% 1/10W
R201	1-216-643-11	s	METAL, CHIP 470 0.5% 1/10W
R208	1-216-643-11	s	METAL, CHIP 470 0.5% 1/10W
R209	1-216-669-11	s	METAL, CHIP 5.6K 0.5% 1/10W
R210	1-216-674-11	s	METAL, CHIP 9.1K 0.5% 1/10W
R211	1-216-685-11	s	METAL, CHIP 27K 0.5% 1/10W
R212	1-216-695-11	s	METAL, CHIP 68K 0.50% 1/10W
R213	1-216-675-11	s	METAL, CHIP 10K 0.5% 1/10W
R214	1-216-667-11	s	METAL, CHIP 4.7K 0.5% 1/10W
R215	1-216-661-11	s	METAL, CHIP 2.7K 0.5% 1/10W
R216	1-216-691-11	s	METAL, CHIP 47K 0.50% 1/10W
R217	1-218-758-11	s	METAL, CHIP 180K 0.50% 1/10W
R218	1-216-672-11	s	METAL, CHIP 7.5K 0.5% 1/10W
R219	1-216-672-11	s	METAL, CHIP 7.5K 0.5% 1/10W
R221	1-216-687-11	s	METAL, CHIP 33K 0.5% 1/10W
R222	1-216-678-11	s	METAL, CHIP 13K 0.50% 1/10W
R223	1-218-754-11	s	METAL 120K 0.50% 1/10W
R224	1-216-683-11	s	METAL, CHIP 22K 0.50% 1/10W
R225	1-216-603-11	s	METAL, CHIP 10 0.50% 1/10W
R226	1-216-683-11	s	METAL, CHIP 22K 0.50% 1/10W
R227	1-216-603-11	s	METAL, CHIP 10 0.50% 1/10W
R228	1-216-627-11	s	METAL, CHIP 100 0.50% 1/10W
R229	1-216-627-11	s	METAL, CHIP 100 0.50% 1/10W

(AU-231 BOARD)

Ref. No. or Q'ty	Part No.	SP	Description
R230	1-216-699-11	s	METAL, CHIP 100K 0.50% 1/10W
R231	1-216-699-11	s	METAL, CHIP 100K 0.50% 1/10W
R232	1-216-675-11	s	METAL, CHIP 10K 0.5% 1/10W
R233	1-216-687-11	s	METAL, CHIP 33K 0.5% 1/10W
R251	1-216-643-11	s	METAL, CHIP 470 0.5% 1/10W
R252	1-216-643-11	s	METAL, CHIP 470 0.5% 1/10W
R253	1-216-668-11	s	METAL, CHIP 5.1K 0.5% 1/10W
R254	1-216-673-11	s	METAL, CHIP 8.2K 0.5% 1/10W
R255	1-216-685-11	s	METAL, CHIP 27K 0.5% 1/10W
R256	1-216-695-11	s	METAL, CHIP 68K 0.50% 1/10W
R257	1-216-675-11	s	METAL, CHIP 10K 0.5% 1/10W
R258	1-216-666-11	s	METAL, CHIP 4.3K 0.5% 1/10W
R259	1-216-661-11	s	METAL, CHIP 2.7K 0.5% 1/10W
R260	1-216-691-11	s	METAL, CHIP 47K 0.50% 1/10W
R261	1-218-758-11	s	METAL, CHIP 180K 0.50% 1/10W
R262	1-216-672-11	s	METAL, CHIP 7.5K 0.5% 1/10W
R263	1-216-672-11	s	METAL, CHIP 7.5K 0.5% 1/10W
R264	1-216-675-11	s	METAL, CHIP 10K 0.5% 1/10W
R265	1-216-687-11	s	METAL, CHIP 33K 0.5% 1/10W
R266	1-216-687-11	s	METAL, CHIP 33K 0.5% 1/10W
R267	1-216-678-11	s	METAL, CHIP 13K 0.50% 1/10W
R268	1-218-754-11	s	METAL 120K 0.50% 1/10W
R269	1-216-683-11	s	METAL, CHIP 22K 0.50% 1/10W
R270	1-216-603-11	s	METAL, CHIP 10 0.50% 1/10W
R271	1-216-603-11	s	METAL, CHIP 10 0.50% 1/10W
R272	1-216-683-11	s	METAL, CHIP 22K 0.50% 1/10W
R273	1-216-627-11	s	METAL, CHIP 100 0.50% 1/10W
R274	1-216-627-11	s	METAL, CHIP 100 0.50% 1/10W
R275	1-216-699-11	s	METAL, CHIP 100K 0.50% 1/10W
R276	1-216-699-11	s	METAL, CHIP 100K 0.50% 1/10W
R301	1-216-683-11	s	METAL, CHIP 22K 0.50% 1/10W
R302	1-216-683-11	s	METAL, CHIP 22K 0.50% 1/10W
R303	1-216-635-11	s	METAL, CHIP 220 0.5% 1/10W
R304	1-216-683-11	s	METAL, CHIP 22K 0.50% 1/10W
R305	1-216-683-11	s	METAL, CHIP 22K 0.50% 1/10W
R306	1-216-651-11	s	METAL, CHIP 1K 0.5% 1/10W
R307	1-216-651-11	s	METAL, CHIP 1K 0.5% 1/10W
R308	1-216-683-11	s	METAL, CHIP 22K 0.50% 1/10W
R309	1-216-683-11	s	METAL, CHIP 22K 0.50% 1/10W
R310	1-216-683-11	s	METAL, CHIP 22K 0.50% 1/10W
R311	1-216-683-11	s	METAL, CHIP 22K 0.50% 1/10W
R312	1-216-683-11	s	METAL, CHIP 22K 0.50% 1/10W
R313	1-216-691-11	s	METAL, CHIP 47K 0.50% 1/10W
R314	1-216-691-11	s	METAL, CHIP 47K 0.50% 1/10W
R315	1-216-671-11	s	METAL, CHIP 6.8K 0.50% 1/10W
R316	1-216-691-11	s	METAL, CHIP 47K 0.50% 1/10W
R317	1-216-687-11	s	METAL, CHIP 33K 0.5% 1/10W
R318	1-216-699-11	s	METAL, CHIP 100K 0.50% 1/10W
R319	1-216-699-11	s	METAL, CHIP 100K 0.50% 1/10W
R320	1-216-699-11	s	METAL, CHIP 100K 0.50% 1/10W
R321	1-216-679-11	s	METAL, CHIP 15K 0.5% 1/10W
R322	1-216-699-11	s	METAL, CHIP 100K 0.50% 1/10W
R323	1-216-611-11	s	METAL, CHIP 22 0.50% 1/10W
R324	1-216-699-11	s	METAL, CHIP 100K 0.50% 1/10W
R325	1-218-776-11	s	METAL, CHIP 1M 0.50% 1/10W
R326	1-216-671-11	s	METAL, CHIP 6.8K 0.50% 1/10W
R401	1-216-683-11	s	METAL, CHIP 22K 0.50% 1/10W
R402	1-216-683-11	s	METAL, CHIP 22K 0.50% 1/10W
R403	1-216-627-11	s	METAL, CHIP 100 0.50% 1/10W

(AU-231 BOARD)

Ref. No. or Q'ty	Part No.	SP	Description
R404	1-216-683-11	s	METAL, CHIP 22K 0.50% 1/10W
R405	1-216-683-11	s	METAL, CHIP 22K 0.50% 1/10W
R406	1-216-683-11	s	METAL, CHIP 22K 0.50% 1/10W
R407	1-216-627-11	s	METAL, CHIP 100 0.50% 1/10W
R408	1-216-683-11	s	METAL, CHIP 22K 0.50% 1/10W
R409	1-216-683-11	s	METAL, CHIP 22K 0.50% 1/10W
R410	1-216-683-11	s	METAL, CHIP 22K 0.50% 1/10W
R411	1-216-627-11	s	METAL, CHIP 100 0.50% 1/10W
R412	1-216-683-11	s	METAL, CHIP 22K 0.50% 1/10W
R413	1-216-627-11	s	METAL, CHIP 100 0.50% 1/10W
R414	1-216-683-11	s	METAL, CHIP 22K 0.50% 1/10W
R415	1-216-683-11	s	METAL, CHIP 22K 0.50% 1/10W
R416	1-216-627-11	s	METAL, CHIP 100 0.50% 1/10W
R417	1-216-683-11	s	METAL, CHIP 22K 0.50% 1/10W
R418	1-216-683-11	s	METAL, CHIP 22K 0.50% 1/10W
R419	1-216-627-11	s	METAL, CHIP 100 0.50% 1/10W
R420	1-216-683-11	s	METAL, CHIP 22K 0.50% 1/10W
R421	1-216-683-11	s	METAL, CHIP 22K 0.50% 1/10W
R422	1-216-683-11	s	METAL, CHIP 22K 0.50% 1/10W
R451	1-216-675-11	s	METAL, CHIP 10K 0.5% 1/10W
R452	1-216-675-11	s	METAL, CHIP 10K 0.5% 1/10W
R453	1-216-699-11	s	METAL, CHIP 100K 0.50% 1/10W
R454	1-216-676-11	s	METAL, CHIP 11K 0.50% 1/10W
R455	1-216-676-11	s	METAL, CHIP 11K 0.50% 1/10W
R456	1-216-699-11	s	METAL, CHIP 100K 0.50% 1/10W
R457	1-216-674-11	s	METAL, CHIP 9.1K 0.5% 1/10W
R458	1-216-674-11	s	METAL, CHIP 9.1K 0.5% 1/10W
R459	1-216-675-11	s	METAL, CHIP 10K 0.5% 1/10W
R460	1-216-675-11	s	METAL, CHIP 10K 0.5% 1/10W
R461	1-216-699-11	s	METAL, CHIP 100K 0.50% 1/10W
R462	1-216-676-11	s	METAL, CHIP 11K 0.50% 1/10W
R463	1-216-676-11	s	METAL, CHIP 11K 0.50% 1/10W
R464	1-216-699-11	s	METAL, CHIP 100K 0.50% 1/10W
R465	1-216-674-11	s	METAL, CHIP 9.1K 0.5% 1/10W
R466	1-216-674-11	s	METAL, CHIP 9.1K 0.5% 1/10W
R468	1-216-683-11	s	METAL, CHIP 22K 0.50% 1/10W
R469	1-216-627-11	s	METAL, CHIP 100 0.50% 1/10W
R470	1-216-683-11	s	METAL, CHIP 22K 0.50% 1/10W
R501	1-216-683-11	s	METAL, CHIP 22K 0.50% 1/10W
R502	1-216-683-11	s	METAL, CHIP 22K 0.50% 1/10W
R503	1-216-691-11	s	METAL, CHIP 47K 0.50% 1/10W
R504	1-216-683-11	s	METAL, CHIP 22K 0.50% 1/10W
R505	1-216-627-11	s	METAL, CHIP 100 0.50% 1/10W
R506	1-216-699-11	s	METAL, CHIP 100K 0.50% 1/10W
R507	1-216-627-11	s	METAL, CHIP 100 0.50% 1/10W
R508	1-216-683-11	s	METAL, CHIP 22K 0.50% 1/10W
R509	1-216-677-11	s	METAL, CHIP 12K 0.5% 1/10W
R510	1-216-627-11	s	METAL, CHIP 100 0.50% 1/10W
R511	1-216-699-11	s	METAL, CHIP 100K 0.50% 1/10W
R512	1-216-699-11	s	METAL, CHIP 100K 0.50% 1/10W
R513	1-216-699-11	s	METAL, CHIP 100K 0.50% 1/10W
R514	1-216-691-11	s	METAL, CHIP 47K 0.50% 1/10W
R515	1-216-662-11	s	METAL 3K 0.50% 1/10W
R516	1-218-776-11	s	METAL, CHIP 1M 0.50% 1/10W
R517	1-216-665-11	s	METAL, CHIP 3.9K 0.5% 1/10W
R518	1-218-776-11	s	METAL, CHIP 1M 0.50% 1/10W
R519	1-216-665-11	s	METAL, CHIP 3.9K 0.5% 1/10W
R520	1-216-693-11	s	METAL, CHIP 56K 0.5% 1/10W
R521	1-216-671-11	s	METAL, CHIP 6.8K 0.50% 1/10W

(AU-231 BOARD)

Ref. No. or Q'ty	Part No.	SP	Description
R522	1-216-682-11	s	METAL, CHIP 20K 0.5% 1/10W
R523	1-216-682-11	s	METAL, CHIP 20K 0.5% 1/10W
R524	1-216-682-11	s	METAL, CHIP 20K 0.5% 1/10W
R525	1-216-682-11	s	METAL, CHIP 20K 0.5% 1/10W
R526	1-216-682-11	s	METAL, CHIP 20K 0.5% 1/10W
R527	1-216-682-11	s	METAL, CHIP 20K 0.5% 1/10W
R528	1-216-682-11	s	METAL, CHIP 20K 0.5% 1/10W
R529	1-216-682-11	s	METAL, CHIP 20K 0.5% 1/10W
R530	1-216-699-11	s	METAL, CHIP 100K 0.50% 1/10W
R531	1-216-627-11	s	METAL, CHIP 100 0.50% 1/10W
R532	1-216-682-11	s	METAL, CHIP 20K 0.5% 1/10W
R533	1-216-682-11	s	METAL, CHIP 20K 0.5% 1/10W
R534	1-216-603-11	s	METAL, CHIP 10 0.50% 1/10W
R535	1-216-603-11	s	METAL, CHIP 10 0.50% 1/10W
R536	1-218-760-11	s	METAL, CHIP 220K 0.50% 1/10W
R537	1-216-683-11	s	METAL, CHIP 22K 0.50% 1/10W
R538	1-216-683-11	s	METAL, CHIP 22K 0.50% 1/10W
R539	1-218-760-11	s	METAL, CHIP 220K 0.50% 1/10W
R540	1-216-683-11	s	METAL, CHIP 22K 0.50% 1/10W
R541	1-216-683-11	s	METAL, CHIP 22K 0.50% 1/10W
R542	1-216-603-11	s	METAL, CHIP 10 0.50% 1/10W
R543	1-216-603-11	s	METAL, CHIP 10 0.50% 1/10W
R544	1-216-603-11	s	METAL, CHIP 10 0.50% 1/10W
R545	1-216-603-11	s	METAL, CHIP 10 0.50% 1/10W
R546	1-216-699-11	s	METAL, CHIP 100K 0.50% 1/10W
R547	1-216-699-11	s	METAL, CHIP 100K 0.50% 1/10W
R548	1-216-699-11	s	METAL, CHIP 100K 0.50% 1/10W
R549	1-216-699-11	s	METAL, CHIP 100K 0.50% 1/10W
R601	1-216-683-11	s	METAL, CHIP 22K 0.50% 1/10W
R602	1-216-627-11	s	METAL, CHIP 100 0.50% 1/10W
R603	1-216-683-11	s	METAL, CHIP 22K 0.50% 1/10W
R604	1-216-683-11	s	METAL, CHIP 22K 0.50% 1/10W
R605	1-216-687-11	s	METAL, CHIP 33K 0.5% 1/10W
R606	1-216-683-11	s	METAL, CHIP 22K 0.50% 1/10W
R607	1-216-675-11	s	METAL, CHIP 10K 0.5% 1/10W
R608	1-218-753-11	s	METAL 110K 0.50% 1/10W
R609	1-218-753-11	s	METAL 110K 0.50% 1/10W
R610	1-216-675-11	s	METAL, CHIP 10K 0.5% 1/10W
R611	1-216-691-11	s	METAL, CHIP 47K 0.50% 1/10W
R612	1-216-691-11	s	METAL, CHIP 47K 0.50% 1/10W
R613	1-216-683-11	s	METAL, CHIP 22K 0.50% 1/10W
R614	1-216-687-11	s	METAL, CHIP 33K 0.5% 1/10W
R615	1-216-675-11	s	METAL, CHIP 10K 0.5% 1/10W
R616	1-216-627-11	s	METAL, CHIP 100 0.50% 1/10W
R617	1-216-682-11	s	METAL, CHIP 20K 0.5% 1/10W
R618	1-216-682-11	s	METAL, CHIP 20K 0.5% 1/10W
R620	1-216-697-91	s	METAL, CHIP 82K 0.50% 1/10W
R621	1-216-675-11	s	METAL, CHIP 10K 0.5% 1/10W
R622	1-216-670-11	s	METAL 6.2K 0.50% 1/10W
R623	1-216-684-11	s	METAL, CHIP 24K 0.50% 1/10W
R624	1-216-684-11	s	METAL, CHIP 24K 0.50% 1/10W
R625	1-218-760-11	s	METAL, CHIP 220K 0.50% 1/10W
R626	1-216-699-11	s	METAL, CHIP 100K 0.50% 1/10W
R627	1-218-754-11	s	METAL 120K 0.50% 1/10W
R628	1-216-677-11	s	METAL, CHIP 12K 0.5% 1/10W
R629	1-218-754-11	s	METAL 120K 0.50% 1/10W
R630	1-216-677-11	s	METAL, CHIP 12K 0.5% 1/10W
R631	1-216-683-11	s	METAL, CHIP 22K 0.50% 1/10W
R632	1-216-683-11	s	METAL, CHIP 22K 0.50% 1/10W

(AU-231 BOARD)

Ref. No. or Q'ty	Part No.	SP	Description
R633	1-216-683-11	s	METAL, CHIP 22K 0.50% 1/10W
R634	1-216-603-11	s	METAL, CHIP 10 0.50% 1/10W
R635	1-216-625-11	s	METAL, CHIP 82 0.5% 1/10W
R636	1-216-610-11	s	METAL 20 0.50% 1/10W
R637	1-216-295-00	s	METAL, CHIP 0 1/10W
R638	1-216-683-11	s	METAL, CHIP 22K 0.50% 1/10W
R639	1-216-603-11	s	METAL, CHIP 10 0.50% 1/10W
R640	1-216-699-11	s	METAL, CHIP 100K 0.50% 1/10W
R641	1-218-754-11	s	METAL 120K 0.50% 1/10W
R642	1-216-677-11	s	METAL, CHIP 12K 0.5% 1/10W
R643	1-218-760-11	s	METAL, CHIP 220K 0.50% 1/10W
R644	1-216-699-11	s	METAL, CHIP 100K 0.50% 1/10W
R645	1-218-754-11	s	METAL 120K 0.50% 1/10W
R646	1-216-677-11	s	METAL, CHIP 12K 0.5% 1/10W
R647	1-216-681-11	s	METAL, CHIP 18K 0.5% 1/10W
R648	1-216-699-11	s	METAL, CHIP 100K 0.50% 1/10W
R649	1-216-627-11	s	METAL, CHIP 100 0.50% 1/10W
R650	1-216-692-11	s	METAL, CHIP 51K 0.50% 1/10W
R651	1-216-627-11	s	METAL, CHIP 100 0.50% 1/10W
R652	1-216-603-11	s	METAL, CHIP 10 0.50% 1/10W
R653	1-216-692-11	s	METAL, CHIP 51K 0.50% 1/10W
R654	1-216-603-11	s	METAL, CHIP 10 0.50% 1/10W
R655	1-216-627-11	s	METAL, CHIP 100 0.50% 1/10W
R656	1-216-627-11	s	METAL, CHIP 100 0.50% 1/10W
R657	1-216-675-11	s	METAL, CHIP 10K 0.5% 1/10W
R658	1-216-675-11	s	METAL, CHIP 10K 0.5% 1/10W
R660	1-216-295-00	s	METAL, CHIP 0 1/10W
R701	1-216-683-11	s	METAL, CHIP 22K 0.50% 1/10W
R702	1-216-627-11	s	METAL, CHIP 100 0.50% 1/10W
R703	1-216-683-11	s	METAL, CHIP 22K 0.50% 1/10W
R704	1-216-683-11	s	METAL, CHIP 22K 0.50% 1/10W
R705	1-216-687-11	s	METAL, CHIP 33K 0.5% 1/10W
R706	1-216-683-11	s	METAL, CHIP 22K 0.50% 1/10W
R707	1-216-675-11	s	METAL, CHIP 10K 0.5% 1/10W
R708	1-218-753-11	s	METAL 110K 0.50% 1/10W
R709	1-218-753-11	s	METAL 110K 0.50% 1/10W
R710	1-216-675-11	s	METAL, CHIP 10K 0.5% 1/10W
R711	1-216-691-11	s	METAL, CHIP 47K 0.50% 1/10W
R712	1-216-691-11	s	METAL, CHIP 47K 0.50% 1/10W
R713	1-216-683-11	s	METAL, CHIP 22K 0.50% 1/10W
R714	1-216-687-11	s	METAL, CHIP 33K 0.5% 1/10W
R715	1-216-675-11	s	METAL, CHIP 10K 0.5% 1/10W
R716	1-216-627-11	s	METAL, CHIP 100 0.50% 1/10W
R717	1-216-682-11	s	METAL, CHIP 20K 0.5% 1/10W
R718	1-216-682-11	s	METAL, CHIP 20K 0.5% 1/10W
R720	1-216-697-91	s	METAL, CHIP 82K 0.50% 1/10W
R721	1-216-675-11	s	METAL, CHIP 10K 0.5% 1/10W
R722	1-216-670-11	s	METAL 6.2K 0.50% 1/10W
R723	1-216-684-11	s	METAL, CHIP 24K 0.50% 1/10W
R724	1-216-684-11	s	METAL, CHIP 24K 0.50% 1/10W
R725	1-218-760-11	s	METAL, CHIP 220K 0.50% 1/10W
R726	1-218-754-11	s	METAL 120K 0.50% 1/10W
R727	1-216-699-11	s	METAL, CHIP 100K 0.50% 1/10W
R728	1-218-754-11	s	METAL 120K 0.50% 1/10W
R729	1-216-677-11	s	METAL, CHIP 12K 0.5% 1/10W
R730	1-216-683-11	s	METAL, CHIP 22K 0.50% 1/10W
R731	1-216-677-11	s	METAL, CHIP 12K 0.5% 1/10W
R732	1-216-683-11	s	METAL, CHIP 22K 0.50% 1/10W
R733	1-216-683-11	s	METAL, CHIP 22K 0.50% 1/10W

(AU-231 BOARD)

Ref. No. or Q'ty	Part No.	SP	Description
R734	1-216-625-11	s	METAL, CHIP 82 0.5% 1/10W
R735	1-216-295-00	s	METAL, CHIP 0 1/10W
R736	1-216-610-11	s	METAL 20 0.50% 1/10W
R737	1-216-603-11	s	METAL, CHIP 10 0.50% 1/10W
R738	1-216-683-11	s	METAL, CHIP 22K 0.50% 1/10W
R739	1-216-603-11	s	METAL, CHIP 10 0.50% 1/10W
R740	1-216-699-11	s	METAL, CHIP 100K 0.50% 1/10W
R741	1-216-699-11	s	METAL, CHIP 100K 0.50% 1/10W
R742	1-218-754-11	s	METAL 120K 0.50% 1/10W
R743	1-218-760-11	s	METAL, CHIP 220K 0.50% 1/10W
R744	1-216-699-11	s	METAL, CHIP 100K 0.50% 1/10W
R745	1-218-754-11	s	METAL 120K 0.50% 1/10W
R746	1-216-677-11	s	METAL, CHIP 12K 0.5% 1/10W
R747	1-216-677-11	s	METAL, CHIP 12K 0.5% 1/10W
R748	1-216-603-11	s	METAL, CHIP 10 0.50% 1/10W
R749	1-216-681-11	s	METAL, CHIP 18K 0.5% 1/10W
R750	1-216-603-11	s	METAL, CHIP 10 0.50% 1/10W
R751	1-216-699-11	s	METAL, CHIP 100K 0.50% 1/10W
R752	1-216-627-11	s	METAL, CHIP 100 0.50% 1/10W
R753	1-216-692-11	s	METAL, CHIP 51K 0.50% 1/10W
R754	1-216-692-11	s	METAL, CHIP 51K 0.50% 1/10W
R755	1-216-627-11	s	METAL, CHIP 100 0.50% 1/10W
R756	1-216-627-11	s	METAL, CHIP 100 0.50% 1/10W
R757	1-216-627-11	s	METAL, CHIP 100 0.50% 1/10W
R758	1-216-675-11	s	METAL, CHIP 10K 0.5% 1/10W
R759	1-216-675-11	s	METAL, CHIP 10K 0.5% 1/10W
R760	1-216-295-00	s	METAL, CHIP 0 1/10W
R901	1-216-627-11	s	METAL, CHIP 100 0.50% 1/10W
R902	1-216-699-11	s	METAL, CHIP 100K 0.50% 1/10W
R903	1-216-627-11	s	METAL, CHIP 100 0.50% 1/10W
R904	1-216-699-11	s	METAL, CHIP 100K 0.50% 1/10W
R905	1-216-627-11	s	METAL, CHIP 100 0.50% 1/10W
R906	1-216-699-11	s	METAL, CHIP 100K 0.50% 1/10W
R907	1-216-627-11	s	METAL, CHIP 100 0.50% 1/10W
R908	1-216-699-11	s	METAL, CHIP 100K 0.50% 1/10W
R909	1-216-699-11	s	METAL, CHIP 100K 0.50% 1/10W
R910	1-216-699-11	s	METAL, CHIP 100K 0.50% 1/10W
R911	1-216-627-11	s	METAL, CHIP 100 0.50% 1/10W
R912	1-216-683-11	s	METAL, CHIP 22K 0.50% 1/10W
R913	1-216-699-11	s	METAL, CHIP 100K 0.50% 1/10W
R914	1-216-699-11	s	METAL, CHIP 100K 0.50% 1/10W
R915	1-216-699-11	s	METAL, CHIP 100K 0.50% 1/10W
R916	1-216-699-11	s	METAL, CHIP 100K 0.50% 1/10W
R917	1-216-627-11	s	METAL, CHIP 100 0.50% 1/10W
R918	1-216-699-11	s	METAL, CHIP 100K 0.50% 1/10W
R919	1-216-627-11	s	METAL, CHIP 100 0.50% 1/10W
R920	1-216-699-11	s	METAL, CHIP 100K 0.50% 1/10W
R921	1-216-699-11	s	METAL, CHIP 100K 0.50% 1/10W
R922	1-216-699-11	s	METAL, CHIP 100K 0.50% 1/10W
R923	1-216-097-91	s	METAL, CHIP 100K 5% 1/10W
R924	1-216-699-11	s	METAL, CHIP 100K 0.50% 1/10W
RV41	1-237-036-11	s	RES, ADJ, METAL 10K
RV61	1-237-036-11	s	RES, ADJ, METAL 10K
RV101	1-237-040-11	s	RES, ADJ, METAL 200K
RV151	1-237-036-11	s	RES, ADJ, METAL 10K
RV201	1-237-037-11	s	RES, ADJ, METAL 20K
RV251	1-237-037-11	s	RES, ADJ, METAL 20K
RV501	1-241-265-11	s	RES, ADJ, METALT 20K

(AU-231 BOARD)

Ref. No. or Q'ty	Part No.	SP	Description
RV502	1-237-037-11	s	RES, ADJ, METAL 20K
RV503	1-241-264-11	s	RES, ADJ, METALT 10K
RV601	1-241-264-11	s	RES, ADJ, METALT 10K
RV602	1-237-038-11	s	RES, ADJ, METAL 50K
RV701	1-241-264-11	s	RES, ADJ, METALT 10K
RV702	1-237-038-11	s	RES, ADJ, METAL 50K
S201	1-570-711-11	s	SWITCH, SLIDE
S251	1-570-711-11	s	SWITCH, SLIDE
S451	1-570-711-11	s	SWITCH, SLIDE
S452	1-570-711-11	s	SWITCH, SLIDE
S501	1-762-217-11	s	SWITCH, SLIDE
S601	1-570-711-11	s	SWITCH, SLIDE
S701	1-570-711-11	s	SWITCH, SLIDE
S901	1-570-711-11	s	SWITCH, SLIDE
T151	1-426-474-11	s	COIL, FM RECOVER
T201	1-426-472-11	s	COIL, FM RECOVER
T251	1-426-473-11	s	COIL, FM RECOVER

AU-236 BOARD

Ref. No. or Q'ty	Part No.	SP	Description
1pc	A-8277-389-A	o	MOUNTED CIRCUIT BOARD, AU-236
6pcs	4-937-336-21	o	HOLDER, LED
2pcs	4-937-336-11	s	HOLDER, LED
2pcs	4-937-336-21	o	HOLDER, LED
C1	1-128-416-11	s	ELECT 100uF 20% 16V
C2	1-126-395-11	s	ELECT 22uF 20% 16V
C3	1-163-037-11	s	CERAMIC, CHIP 0.022uF 10% 25V
C4	1-135-180-21	s	TANTALUM, CHIP 3.3uF 20% 6.3V
C5	1-135-180-21	s	TANTALUM, CHIP 3.3uF 20% 6.3V
C6	1-163-245-11	s	CERAMIC, CHIP 56PF 5% 50V
C7	1-135-073-00	s	TANTALUM, CHIP 0.33uF 10% 35V
C8	1-135-070-00	s	TANTALUM, CHIP 0.1uF 10% 35V
C9	1-163-038-00	s	CERAMIC, CHIP 0.1uF 25V
CN1	1-573-370-21	s	CONNECTOR, FFC/FPC 30P
CN2	1-573-354-11	s	CONNECTOR, FFC/FPC 14P
CN3	1-506-473-11	o	CONNECTOR, 8P, MALE
CN4	1-506-472-11	s	CONNECTOR, 7P, MALE
D1	8-719-057-94	s	DIODE SPR-356MUW5F
D2	8-719-057-94	s	DIODE SPR-356MUW5F
D3	8-719-057-94	s	DIODE SPR-356MUW5F
D4	8-719-057-94	s	DIODE SPR-356MUW5F
D5	8-719-057-94	s	DIODE SPR-356MUW5F
D6	8-719-057-94	s	DIODE SPR-356MUW5F
D7	8-719-060-68	s	DIODE SLR-332MG3F
D8	8-719-060-68	s	DIODE SLR-332MG3F
D9	8-719-053-78	s	DIODE SLR-332VC3F
D10	8-719-053-78	s	DIODE SLR-332VC3F
D11	8-719-024-81	s	DIODE 1SS300-TE85L
IC1	8-759-100-96	s	IC UPC4558G2
R1	1-216-013-00	s	METAL, CHIP 33 5% 1/10W
R2	1-216-013-00	s	METAL, CHIP 33 5% 1/10W
R3	1-216-013-00	s	METAL, CHIP 33 5% 1/10W
R4	1-216-013-00	s	METAL, CHIP 33 5% 1/10W
R5	1-216-041-00	s	METAL, CHIP 470 5% 1/10W
R6	1-216-041-00	s	METAL, CHIP 470 5% 1/10W
R7	1-216-047-91	s	METAL, CHIP 820 5% 1/10W
R8	1-216-047-91	s	METAL, CHIP 820 5% 1/10W
R10	1-216-049-91	s	METAL, CHIP 1K 5% 1/10W
R11	1-216-049-91	s	METAL, CHIP 1K 5% 1/10W
R12	1-216-049-91	s	METAL, CHIP 1K 5% 1/10W
R13	1-216-049-91	s	METAL, CHIP 1K 5% 1/10W
R14	1-216-017-91	s	METAL, CHIP 47 5% 1/10W
R15	1-216-055-00	s	METAL, CHIP 1.8K 5% 1/10W
R16	1-216-055-00	s	METAL, CHIP 1.8K 5% 1/10W
R17	1-216-699-11	s	METAL, CHIP 100K 0.50% 1/10W
R18	1-216-699-11	s	METAL, CHIP 100K 0.50% 1/10W
R19	1-216-073-00	s	METAL, CHIP 10K 5% 1/10W
R20	1-216-105-91	s	METAL, CHIP 220K 5% 1/10W
R21	1-216-105-91	s	METAL, CHIP 220K 5% 1/10W
R22	1-216-057-00	s	METAL, CHIP 2.2K 5% 1/10W
R23	1-216-009-00	s	METAL, CHIP 22 5% 1/10W
R24	1-216-057-00	s	METAL, CHIP 2.2K 5% 1/10W
R25	1-216-025-91	s	METAL, CHIP 100 5% 1/10W
R26	1-216-699-11	s	METAL, CHIP 100K 0.50% 1/10W
R27	1-216-105-91	s	METAL, CHIP 220K 5% 1/10W
R28	1-216-105-91	s	METAL, CHIP 220K 5% 1/10W

http://getMANUAL.com

(AU-236 BOARD)

Ref. No. or Q'ty	Part No.	SP	Description
RV100	1-238-255-21	s	RES, VAR, CARBON 10K
S1	1-762-122-11	s	SWITCH, TOGGLE
S2	1-762-123-11	s	SWITCH, TOGGLE
S3	1-762-123-11	s	SWITCH, TOGGLE
S4	1-570-134-11	s	SWITCH, SLIDE

CN-1335 BOARD

Ref. No. or Q'ty	Part No.	SP	Description
1pc	A-8277-386-A	o	MOUNTED CIRCUIT BOARD, CN-1335
1pc	3-697-753-02	o	BNC PANEL
2pcs	7-682-903-01	s	SCREW +PWH 3X5
CN1	1-561-336-00	s	CONNECTOR, COAXIAL
CN2	1-561-336-00	s	CONNECTOR, COAXIAL
CN3	1-561-336-00	s	CONNECTOR, COAXIAL
CN4	1-561-336-00	s	CONNECTOR, COAXIAL
CN5	1-561-336-00	s	CONNECTOR, COAXIAL
CN6	1-561-336-00	s	CONNECTOR, COAXIAL
CN7	1-561-336-00	s	CONNECTOR, COAXIAL
CN8	1-561-336-00	s	CONNECTOR, COAXIAL
CN9	1-561-336-00	s	CONNECTOR, COAXIAL
CN10	1-561-336-00	s	CONNECTOR, COAXIAL
CN11	1-561-336-00	s	CONNECTOR, COAXIAL
CN12	1-561-336-00	s	CONNECTOR, COAXIAL
CN13	1-561-336-00	s	CONNECTOR, COAXIAL
CN14	1-561-336-00	s	CONNECTOR, COAXIAL
CN15	1-561-336-00	s	CONNECTOR, COAXIAL
CN16	1-561-336-00	s	CONNECTOR, COAXIAL
CN17	1-580-532-11	o	PIN, CONNECTOR 6P
CN18	1-580-542-11	o	PIN, CONNECTOR 26P
CN19	1-506-469-11	s	CONNECTOR, 4P, MALE

CN-1336 BOARD

Ref. No. or Q'ty	Part No.	SP	Description
1pc	1-661-621-11	o	PRINTED CIRCUIT BOARD, CN-1336
CN1	1-750-890-11	s	CONNECTOR,D-SUB 25P, FEMALE
CN2	1-573-727-11	s	CONNECTOR, FPC 25P

CN-1337 BOARD

Ref. No. or Q'ty	Part No.	SP	Description
1pc	1-661-622-11	o	PRINTED CIRCUIT BOARD, CN-1337
CN1	1-766-696-11	o	CONNECTOR, 8P
CN2	1-770-324-11	o	CONNECTOR, FPC 8P

CN-1413 BOARD

Ref. No. or Q'ty	Part No.	SP	Description
1pc	1-661-839-11	o	PRINTED CIRCUIT BOARD, CN-1413
CN1	1-750-889-11	s	CONNECTOR,D-SUB 15P, FEMALE
CN2	1-766-289-11	s	CONNECTOR, FPC 16P

CN-1495 BOARD

Ref. No. or Q'ty	Part No.	SP	Description
1pc	A-8312-234-A	o	MOUNTED CIRCUIT BOARD, CN-1495
1pc	1-569-194-11	o	TERMINAL, SOLDERLESS
1pc	1-569-200-11	o	HOUSING, 7P
C1	1-163-275-11	s	CERAMIC 0.001uF 5% 50V
C2	1-163-275-11	s	CERAMIC 0.001uF 5% 50V
C3	1-163-275-11	s	CERAMIC 0.001uF 5% 50V
C4	1-163-275-11	s	CERAMIC 0.001uF 5% 50V
C5	1-163-275-11	s	CERAMIC 0.001uF 5% 50V
CN1	1-778-343-11	o	CONNECTOR, XLR 5P, FEMALE

DM-110 BOARD

Ref. No. or Q'ty	Part No.	SP	Description
1pc	A-8277-382-A	o	MOUNTED CIRCUIT BOARD, DM-110
1pc	1-239-963-51	s	FILTER, MPX
1pc	3-697-758-03	o	PANEL,DM
1pc	2-251-622-01	o	LEVER, PC BOARD
6pcs	7-682-903-01	s	SCREW +PWH 3X5
3pcs	3-719-381-11	s	SCREW (M2X5)
1pc	3-697-870-02	o	INSULATER,BOARD
C1	1-126-396-11	s	ELECT, CHIP 47uF 20% 16V
C2	1-126-391-11	s	ELECT 47uF 20% 6.3V
C3	1-104-823-11	s	TANTALUM, CHIP 47uF 20% 16V
C4	1-107-686-11	s	CHIP, TANTALUM 4.7uF 20% 16V
C5	1-107-686-11	s	CHIP, TANTALUM 4.7uF 20% 16V
C6	1-104-852-11	s	TANTALUM, CHIP 22uF 20% 10V
C7	1-164-156-11	s	CERAMIC 0.1uF 25V
C8	1-113-682-11	s	CHIP,TANTALUM 33uF 20% 10V
C9	1-113-682-11	s	CHIP,TANTALUM 33uF 20% 10V
C10	1-164-156-11	s	CERAMIC 0.1uF 25V
C11	1-104-478-11	s	TANTAL 10uF 20% 35V
C12	1-104-852-11	s	TANTALUM, CHIP 22uF 20% 10V
C13	1-164-156-11	s	CERAMIC 0.1uF 25V
C14	1-164-156-11	s	CERAMIC 0.1uF 25V
C15	1-164-156-11	s	CERAMIC 0.1uF 25V
C16	1-164-156-11	s	CERAMIC 0.1uF 25V
C17	1-104-823-11	s	TANTALUM, CHIP 47uF 20% 16V
C18	1-126-391-11	s	ELECT 47uF 20% 6.3V
C101	1-104-851-11	s	TANTALUM, CHIP 10uF 20% 10V
C102	1-104-851-11	s	TANTALUM, CHIP 10uF 20% 10V
C103	1-164-156-11	s	CERAMIC 0.1uF 25V
C104	1-164-156-11	s	CERAMIC 0.1uF 25V
C105	1-164-156-11	s	CERAMIC 0.1uF 25V
C106	1-164-156-11	s	CERAMIC 0.1uF 25V
C107	1-164-156-11	s	CERAMIC 0.1uF 25V
C108	1-162-964-11	s	CERAMIC 0.001uF 10% 50V
C109	1-164-156-11	s	CERAMIC 0.1uF 25V
C110	1-164-156-11	s	CERAMIC 0.1uF 25V
C112	1-164-156-11	s	CERAMIC 0.1uF 25V
C115	1-164-156-11	s	CERAMIC 0.1uF 25V
C116	1-164-156-11	s	CERAMIC 0.1uF 25V
C117	1-164-156-11	s	CERAMIC 0.1uF 25V
C119	1-164-156-11	s	CERAMIC 0.1uF 25V
C120	1-164-156-11	s	CERAMIC 0.1uF 25V
C121	1-164-156-11	s	CERAMIC 0.1uF 25V
C122	1-164-156-11	s	CERAMIC 0.1uF 25V
C124	1-164-156-11	s	CERAMIC 0.1uF 25V
C127	1-164-156-11	s	CERAMIC 0.1uF 25V
C128	1-164-156-11	s	CERAMIC 0.1uF 25V
C129	1-164-156-11	s	CERAMIC 0.1uF 25V
C131	1-164-156-11	s	CERAMIC 0.1uF 25V
C132	1-164-156-11	s	CERAMIC 0.1uF 25V
C133	1-164-156-11	s	CERAMIC 0.1uF 25V
C134	1-164-156-11	s	CERAMIC 0.1uF 25V
C135	1-164-156-11	s	CERAMIC 0.1uF 25V
C165	1-164-156-11	s	CERAMIC 0.1uF 25V
C166	1-164-156-11	s	CERAMIC 0.1uF 25V
C167	1-164-156-11	s	CERAMIC 0.1uF 25V
C168	1-162-964-11	s	CERAMIC 0.001uF 10% 50V
C169	1-164-156-11	s	CERAMIC 0.1uF 25V
C170	1-164-156-11	s	CERAMIC 0.1uF 25V
C170	1-164-156-11	s	CERAMIC 0.1uF 25V

(DM-110 BOARD)

Ref. No. or Q'ty	Part No.	SP	Description
C172	1-164-156-11	s	CERAMIC 0.1uF 25V
C173	1-162-964-11	s	CERAMIC 0.001uF 10% 50V
C174	1-104-851-11	s	TANTALUM, CHIP 10uF 20% 10V
C175	1-135-179-21	s	TANTAL 2.2uF 10% 16V
C176	1-135-179-21	s	TANTAL 2.2uF 10% 16V
C177	1-104-851-11	s	TANTALUM, CHIP 10uF 20% 10V
C178	1-104-851-11	s	TANTALUM, CHIP 10uF 20% 10V
C179	1-164-156-11	s	CERAMIC 0.1uF 25V
C180	1-164-156-11	s	CERAMIC 0.1uF 25V
C201	1-164-156-11	s	CERAMIC 0.1uF 25V
C202	1-104-852-11	s	TANTALUM, CHIP 22uF 20% 10V
C203	1-104-852-11	s	TANTALUM, CHIP 22uF 20% 10V
C204	1-164-156-11	s	CERAMIC 0.1uF 25V
C205	1-164-156-11	s	CERAMIC 0.1uF 25V
C206	1-164-156-11	s	CERAMIC 0.1uF 25V
C207	1-164-156-11	s	CERAMIC 0.1uF 25V
C208	1-162-970-11	s	CERAMIC, CHIP 0.01uF 10% 25V
C209	1-104-851-11	s	TANTALUM, CHIP 10uF 20% 10V
C210	1-164-156-11	s	CERAMIC 0.1uF 25V
C211	1-164-156-11	s	CERAMIC 0.1uF 25V
C212	1-164-156-11	s	CERAMIC 0.1uF 25V
C213	1-135-179-21	s	TANTAL 2.2uF 10% 16V
C214	1-135-179-21	s	TANTAL 2.2uF 10% 16V
C215	1-162-927-11	s	CERAMIC, CHIP 100PF 5% 50V
C216	1-164-156-11	s	CERAMIC 0.1uF 25V
C217	1-104-851-11	s	TANTALUM, CHIP 10uF 20% 10V
C301	1-104-852-11	s	TANTALUM, CHIP 22uF 20% 10V
C302	1-104-852-11	s	TANTALUM, CHIP 22uF 20% 10V
C303	1-164-156-11	s	CERAMIC 0.1uF 25V
C304	1-164-156-11	s	CERAMIC 0.1uF 25V
C305	1-164-156-11	s	CERAMIC 0.1uF 25V
C306	1-164-156-11	s	CERAMIC 0.1uF 25V
C307	1-164-156-11	s	CERAMIC 0.1uF 25V
C308	1-162-964-11	s	CERAMIC 0.001uF 10% 50V
C309	1-164-156-11	s	CERAMIC 0.1uF 25V
C310	1-164-156-11	s	CERAMIC 0.1uF 25V
C312	1-164-156-11	s	CERAMIC 0.1uF 25V
C313	1-164-156-11	s	CERAMIC 0.1uF 25V
C314	1-162-959-11	s	CERAMIC 330PF 5% 50V
C317	1-164-156-11	s	CERAMIC 0.1uF 25V
C318	1-164-156-11	s	CERAMIC 0.1uF 25V
C319	1-164-156-11	s	CERAMIC 0.1uF 25V
C320	1-164-156-11	s	CERAMIC 0.1uF 25V
C321	1-164-156-11	s	CERAMIC 0.1uF 25V
C323	1-164-156-11	s	CERAMIC 0.1uF 25V
C324	1-164-156-11	s	CERAMIC 0.1uF 25V
C325	1-162-964-11	s	CERAMIC 0.001uF 10% 50V
C326	1-164-156-11	s	CERAMIC 0.1uF 25V
C328	1-164-156-11	s	CERAMIC 0.1uF 25V
C329	1-162-959-11	s	CERAMIC 330PF 5% 50V
C332	1-164-156-11	s	CERAMIC 0.1uF 25V
C333	1-164-156-11	s	CERAMIC 0.1uF 25V
C334	1-164-156-11	s	CERAMIC 0.1uF 25V
C335	1-164-156-11	s	CERAMIC 0.1uF 25V
C336	1-164-156-11	s	CERAMIC 0.1uF 25V
C338	1-164-156-11	s	CERAMIC 0.1uF 25V
C339	1-164-156-11	s	CERAMIC 0.1uF 25V
C340	1-113-682-11	s	CHIP,TANTALUM 33uF 20% 10V
C341	1-113-682-11	s	CHIP,TANTALUM 33uF 20% 10V
C341	1-113-682-11	s	CHIP,TANTALUM 33uF 20% 10V

(DM-110 BOARD)

Ref. No. or Q'ty	Part No.	SP	Description
C342	1-113-682-11	s	CHIP,TANTALUM 33uF 20% 10V
C343	1-113-682-11	s	CHIP,TANTALUM 33uF 20% 10V
C344	1-164-156-11	s	CERAMIC 0.1uF 25V
C345	1-164-156-11	s	CERAMIC 0.1uF 25V
C346	1-164-156-11	s	CERAMIC 0.1uF 25V
C347	1-164-156-11	s	CERAMIC 0.1uF 25V
C365	1-162-970-11	s	CERAMIC, CHIP 0.01uF 10% 25V
C366	1-162-970-11	s	CERAMIC, CHIP 0.01uF 10% 25V
C367	1-162-970-11	s	CERAMIC, CHIP 0.01uF 10% 25V
C368	1-162-964-11	s	CERAMIC 0.001uF 10% 50V
C369	1-164-156-11	s	CERAMIC 0.1uF 25V
C370	1-162-904-11	s	CERAMIC 0.5PF 0.25PF 50V
C372	1-164-156-11	s	CERAMIC 0.1uF 25V
C373	1-164-156-11	s	CERAMIC 0.1uF 25V
C374	1-162-964-11	s	CERAMIC 0.001uF 10% 50V
C375	1-162-905-11	s	CERAMIC 1PF 0.25PF 50V
C376	1-164-156-11	s	CERAMIC 0.1uF 25V
C377	1-162-964-11	s	CERAMIC 0.001uF 10% 50V
C378	1-135-091-00	s	TANTALUM, CHIP 1uF 20% 16V
C379	1-104-851-11	s	TANTALUM, CHIP 10uF 20% 10V
C380	1-135-179-21	s	TANTAL 2.2uF 10% 16V
C381	1-135-179-21	s	TANTAL 2.2uF 10% 16V
C382	1-104-852-11	s	TANTALUM, CHIP 22uF 20% 10V
C383	1-104-852-11	s	TANTALUM, CHIP 22uF 20% 10V
C384	1-164-156-11	s	CERAMIC 0.1uF 25V
C385	1-164-156-11	s	CERAMIC 0.1uF 25V
C402	1-164-156-11	s	CERAMIC 0.1uF 25V
C403	1-164-156-11	s	CERAMIC 0.1uF 25V
C404	1-104-851-11	s	TANTALUM, CHIP 10uF 20% 10V
C405	1-162-970-11	s	CERAMIC, CHIP 0.01uF 10% 25V
C406	1-162-923-11	s	CERAMIC, CHIP 47PF 5% 50V
C407	1-162-970-11	s	CERAMIC, CHIP 0.01uF 10% 25V
C408	1-135-179-21	s	TANTAL 2.2uF 10% 16V
C409	1-164-217-11	s	CERAMIC 150PF 5% 50V
C411	1-164-156-11	s	CERAMIC 0.1uF 25V
C412	1-162-925-11	s	CERAMIC, CHIP 68PF 5% 50V
C413	1-162-957-11	s	CERAMIC 220PF 5% 50V
C414	1-115-416-11	s	CHIP, CERAMIC 1000PF 5% 25V
C415	1-104-852-11	s	TANTALUM, CHIP 22uF 20% 10V
C416	1-104-852-11	s	TANTALUM, CHIP 22uF 20% 10V
C417	1-115-416-11	s	CHIP, CERAMIC 1000PF 5% 25V
C418	1-162-957-11	s	CERAMIC 220PF 5% 50V
C419	1-162-970-11	s	CERAMIC, CHIP 0.01uF 10% 25V
C420	1-162-905-11	s	CERAMIC 1PF 0.25PF 50V
C421	1-164-156-11	s	CERAMIC 0.1uF 25V
C422	1-164-156-11	s	CERAMIC 0.1uF 25V
C423	1-164-156-11	s	CERAMIC 0.1uF 25V
C424	1-115-416-11	s	CHIP, CERAMIC 1000PF 5% 25V
C425	1-115-416-11	s	CHIP, CERAMIC 1000PF 5% 25V
C426	1-115-416-11	s	CHIP, CERAMIC 1000PF 5% 25V
C501	1-162-970-11	s	CERAMIC, CHIP 0.01uF 10% 25V
C502	1-162-970-11	s	CERAMIC, CHIP 0.01uF 10% 25V
C503	1-162-970-11	s	CERAMIC, CHIP 0.01uF 10% 25V
C504	1-164-156-11	s	CERAMIC 0.1uF 25V
C505	1-164-156-11	s	CERAMIC 0.1uF 25V
C506	1-164-156-11	s	CERAMIC 0.1uF 25V
C507	1-104-851-11	s	TANTALUM, CHIP 10uF 20% 10V
C508	1-162-919-11	s	CERAMIC, CHIP 22PF 5% 50V
C509	1-164-156-11	s	CERAMIC 0.1uF 25V

(DM-110 BOARD)

Ref. No. or Q'ty	Part No.	SP	Description
C510	1-126-603-11	s	ELECT 4.7uF 20% 35V
C511	1-104-851-11	s	TANTALUM, CHIP 10uF 20% 10V
C512	1-104-852-11	s	TANTALUM, CHIP 22uF 20% 10V
C513	1-104-852-11	s	TANTALUM, CHIP 22uF 20% 10V
C514	1-162-970-11	s	CERAMIC, CHIP 0.01uF 10% 25V
C515	1-107-688-11	s	TANTALUM 1.5uF 20% 20V
C516	1-107-688-11	s	TANTALUM 1.5uF 20% 20V
C517	1-162-970-11	s	CERAMIC, CHIP 0.01uF 10% 25V
C518	1-107-688-11	s	TANTALUM 1.5uF 20% 20V
C519	1-162-964-11	s	CERAMIC 0.001uF 10% 50V
C520	1-107-688-11	s	TANTALUM 1.5uF 20% 20V
C521	1-164-156-11	s	CERAMIC 0.1uF 25V
C522	1-164-156-11	s	CERAMIC 0.1uF 25V
C523	1-164-156-11	s	CERAMIC 0.1uF 25V
C524	1-164-156-11	s	CERAMIC 0.1uF 25V
C525	1-164-156-11	s	CERAMIC 0.1uF 25V
C526	1-164-156-11	s	CERAMIC 0.1uF 25V
C601	1-162-970-11	s	CERAMIC, CHIP 0.01uF 10% 25V
C602	1-162-970-11	s	CERAMIC, CHIP 0.01uF 10% 25V
C603	1-162-970-11	s	CERAMIC, CHIP 0.01uF 10% 25V
C604	1-164-156-11	s	CERAMIC 0.1uF 25V
C606	1-104-851-11	s	TANTALUM, CHIP 10uF 20% 10V
C607	1-104-851-11	s	TANTALUM, CHIP 10uF 20% 10V
C608	1-164-156-11	s	CERAMIC 0.1uF 25V
C609	1-164-156-11	s	CERAMIC 0.1uF 25V
C610	1-164-156-11	s	CERAMIC 0.1uF 25V
C611	1-164-156-11	s	CERAMIC 0.1uF 25V
C612	1-104-851-11	s	TANTALUM, CHIP 10uF 20% 10V
C613	1-162-912-11	s	CERAMIC 7PF 0.5PF 50V
C614	1-162-920-11	s	CERAMIC, CHIP 27PF 5% 50V
C615	1-104-852-11	s	TANTALUM, CHIP 22uF 20% 10V
C616	1-104-852-11	s	TANTALUM, CHIP 22uF 20% 10V
C617	1-162-907-11	s	CERAMIC, CHIP 2PF 50V
C618	1-162-914-11	s	CERAMIC 9PF 0.5PF 50V
C619	1-104-851-11	s	TANTALUM, CHIP 10uF 20% 10V
C620	1-164-156-11	s	CERAMIC 0.1uF 25V
C621	1-162-911-11	s	CERAMIC, CHIP 6PF 50V
C622	1-164-156-11	s	CERAMIC 0.1uF 25V
C623	1-162-970-11	s	CERAMIC, CHIP 0.01uF 10% 25V
C624	1-126-603-11	s	ELECT 4.7uF 20% 35V
C625	1-104-851-11	s	TANTALUM, CHIP 10uF 20% 10V
C626	1-104-851-11	s	TANTALUM, CHIP 10uF 20% 10V
C627	1-164-156-11	s	CERAMIC 0.1uF 25V
C628	1-104-851-11	s	TANTALUM, CHIP 10uF 20% 10V
C629	1-162-970-11	s	CERAMIC, CHIP 0.01uF 10% 25V
C630	1-164-156-11	s	CERAMIC 0.1uF 25V
C631	1-164-156-11	s	CERAMIC 0.1uF 25V
C632	1-162-970-11	s	CERAMIC, CHIP 0.01uF 10% 25V
C701	1-162-970-11	s	CERAMIC, CHIP 0.01uF 10% 25V
C702	1-162-970-11	s	CERAMIC, CHIP 0.01uF 10% 25V
C703	1-162-970-11	s	CERAMIC, CHIP 0.01uF 10% 25V
C704	1-164-156-11	s	CERAMIC 0.1uF 25V
C706	1-104-851-11	s	TANTALUM, CHIP 10uF 20% 10V
C707	1-104-851-11	s	TANTALUM, CHIP 10uF 20% 10V
C708	1-164-156-11	s	CERAMIC 0.1uF 25V
C709	1-164-156-11	s	CERAMIC 0.1uF 25V
C710	1-162-970-11	s	CERAMIC, CHIP 0.01uF 10% 25V
C711	1-164-156-11	s	CERAMIC 0.1uF 25V
C712	1-104-851-11	s	TANTALUM, CHIP 10uF 20% 10V

(DM-110 BOARD)

Ref. No. or Q'ty	Part No.	SP	Description
C714	1-162-919-11	s	CERAMIC, CHIP 22PF 5% 50V
C715	1-104-852-11	s	TANTALUM, CHIP 22uF 20% 10V
C716	1-104-852-11	s	TANTALUM, CHIP 22uF 20% 10V
C717	1-162-907-11	s	CERAMIC, CHIP 2PF 50V
C718	1-162-970-11	s	CERAMIC, CHIP 0.01uF 10% 25V
C719	1-162-910-11	s	CERAMIC 5PF 0.25PF 50V
C720	1-104-851-11	s	TANTALUM, CHIP 10uF 20% 10V
C721	1-164-156-11	s	CERAMIC 0.1uF 25V
C722	1-162-909-11	s	CERAMIC 4PF 0.25PF 50V
C723	1-104-851-11	s	TANTALUM, CHIP 10uF 20% 10V
C724	1-104-851-11	s	TANTALUM, CHIP 10uF 20% 10V
C725	1-104-851-11	s	TANTALUM, CHIP 10uF 20% 10V
C726	1-104-851-11	s	TANTALUM, CHIP 10uF 20% 10V
C727	1-162-964-11	s	CERAMIC 0.001uF 10% 50V
C728	1-126-603-11	s	ELECT 4.7uF 20% 35V
C729	1-162-964-11	s	CERAMIC 0.001uF 10% 50V
C730	1-104-852-11	s	TANTALUM, CHIP 22uF 20% 10V
C731	1-104-852-11	s	TANTALUM, CHIP 22uF 20% 10V
C732	1-162-970-11	s	CERAMIC, CHIP 0.01uF 10% 25V
C733	1-162-970-11	s	CERAMIC, CHIP 0.01uF 10% 25V
C734	1-164-156-11	s	CERAMIC 0.1uF 25V
C735	1-164-156-11	s	CERAMIC 0.1uF 25V
C736	1-162-970-11	s	CERAMIC, CHIP 0.01uF 10% 25V
C737	1-164-156-11	s	CERAMIC 0.1uF 25V
C738	1-164-156-11	s	CERAMIC 0.1uF 25V
C739	1-162-970-11	s	CERAMIC, CHIP 0.01uF 10% 25V
C801	1-162-970-11	s	CERAMIC, CHIP 0.01uF 10% 25V
C802	1-162-970-11	s	CERAMIC, CHIP 0.01uF 10% 25V
C803	1-162-970-11	s	CERAMIC, CHIP 0.01uF 10% 25V
C804	1-164-156-11	s	CERAMIC 0.1uF 25V
C806	1-104-851-11	s	TANTALUM, CHIP 10uF 20% 10V
C807	1-104-851-11	s	TANTALUM, CHIP 10uF 20% 10V
C808	1-164-156-11	s	CERAMIC 0.1uF 25V
C810	1-164-156-11	s	CERAMIC 0.1uF 25V
C811	1-162-970-11	s	CERAMIC, CHIP 0.01uF 10% 25V
C812	1-164-156-11	s	CERAMIC 0.1uF 25V
C813	1-104-851-11	s	TANTALUM, CHIP 10uF 20% 10V
C815	1-162-919-11	s	CERAMIC, CHIP 22PF 5% 50V
C816	1-104-852-11	s	TANTALUM, CHIP 22uF 20% 10V
C817	1-104-852-11	s	TANTALUM, CHIP 22uF 20% 10V
C818	1-162-907-11	s	CERAMIC, CHIP 2PF 50V
C819	1-162-970-11	s	CERAMIC, CHIP 0.01uF 10% 25V
C820	1-162-916-11	s	CERAMIC, CHIP 12PF 5% 50V
C821	1-104-851-11	s	TANTALUM, CHIP 10uF 20% 10V
C822	1-164-156-11	s	CERAMIC 0.1uF 25V
C823	1-162-909-11	s	CERAMIC 4PF 0.25PF 50V
C824	1-104-851-11	s	TANTALUM, CHIP 10uF 20% 10V
C825	1-104-851-11	s	TANTALUM, CHIP 10uF 20% 10V
C826	1-135-091-00	s	TANTALUM, CHIP 1uF 20% 16V
C827	1-135-091-00	s	TANTALUM, CHIP 1uF 20% 16V
C828	1-162-970-11	s	CERAMIC, CHIP 0.01uF 10% 25V
C829	1-126-603-11	s	ELECT 4.7uF 20% 35V
C830	1-162-970-11	s	CERAMIC, CHIP 0.01uF 10% 25V
C831	1-107-686-11	s	CHIP, TANTALUM 4.7uF 20% 16V
C832	1-107-686-11	s	CHIP, TANTALUM 4.7uF 20% 16V
C833	1-162-970-11	s	CERAMIC, CHIP 0.01uF 10% 25V
C834	1-162-970-11	s	CERAMIC, CHIP 0.01uF 10% 25V
C835	1-162-918-11	s	CERAMIC, CHIP 18PF 5% 50V
C836	1-164-156-11	s	CERAMIC 0.1uF 25V

(DM-110 BOARD)

Ref. No. or Q'ty	Part No.	SP	Description
C837	1-164-156-11	s	CERAMIC 0.1uF 25V
C838	1-162-970-11	s	CERAMIC, CHIP 0.01uF 10% 25V
C839	1-164-156-11	s	CERAMIC 0.1uF 25V
C840	1-164-156-11	s	CERAMIC 0.1uF 25V
C841	1-162-970-11	s	CERAMIC, CHIP 0.01uF 10% 25V
C901	1-104-852-11	s	TANTALUM, CHIP 22uF 20% 10V
C902	1-104-852-11	s	TANTALUM, CHIP 22uF 20% 10V
C903	1-164-156-11	s	CERAMIC 0.1uF 25V
C904	1-164-156-11	s	CERAMIC 0.1uF 25V
C905	1-162-964-11	s	CERAMIC 0.001uF 10% 50V
C906	1-162-964-11	s	CERAMIC 0.001uF 10% 50V
C907	1-162-964-11	s	CERAMIC 0.001uF 10% 50V
C909	1-104-851-11	s	TANTALUM, CHIP 10uF 20% 10V
C910	1-162-919-11	s	CERAMIC, CHIP 22PF 5% 50V
C911	1-164-156-11	s	CERAMIC 0.1uF 25V
C912	1-107-686-11	s	CHIP, TANTALUM 4.7uF 20% 16V
C914	1-162-919-11	s	CERAMIC, CHIP 22PF 5% 50V
C915	1-104-851-11	s	TANTALUM, CHIP 10uF 20% 10V
C916	1-104-852-11	s	TANTALUM, CHIP 22uF 20% 10V
C917	1-104-852-11	s	TANTALUM, CHIP 22uF 20% 10V
C918	1-162-908-11	s	CERAMIC 3PF 0.25PF 50V
C919	1-104-851-11	s	TANTALUM, CHIP 10uF 20% 10V
C920	1-164-156-11	s	CERAMIC 0.1uF 25V
C921	1-164-156-11	s	CERAMIC 0.1uF 25V
C922	1-104-851-11	s	TANTALUM, CHIP 10uF 20% 10V
C923	1-104-851-11	s	TANTALUM, CHIP 10uF 20% 10V
C924	1-104-851-11	s	TANTALUM, CHIP 10uF 20% 10V
C925	1-162-970-11	s	CERAMIC, CHIP 0.01uF 10% 25V
C926	1-164-156-11	s	CERAMIC 0.1uF 25V
C927	1-162-922-11	s	CERAMIC, CHIP 39PF 5% 50V
C928	1-164-156-11	s	CERAMIC 0.1uF 25V
C929	1-164-156-11	s	CERAMIC 0.1uF 25V
C930	1-164-217-11	s	CERAMIC 150PF 5% 50V
C931	1-162-910-11	s	CERAMIC 5PF 0.25PF 50V
C932	1-164-156-11	s	CERAMIC 0.1uF 25V
C933	1-164-156-11	s	CERAMIC 0.1uF 25V
C934	1-164-156-11	s	CERAMIC 0.1uF 25V
C935	1-164-156-11	s	CERAMIC 0.1uF 25V
C936	1-164-156-11	s	CERAMIC 0.1uF 25V
C937	1-164-156-11	s	CERAMIC 0.1uF 25V
C938	1-164-156-11	s	CERAMIC 0.1uF 25V
C939	1-164-156-11	s	CERAMIC 0.1uF 25V
C940	1-164-156-11	s	CERAMIC 0.1uF 25V
C941	1-164-156-11	s	CERAMIC 0.1uF 25V
C942	1-164-156-11	s	CERAMIC 0.1uF 25V
C943	1-164-156-11	s	CERAMIC 0.1uF 25V
C944	1-164-156-11	s	CERAMIC 0.1uF 25V
C945	1-164-156-11	s	CERAMIC 0.1uF 25V
C946	1-164-156-11	s	CERAMIC 0.1uF 25V
C947	1-164-156-11	s	CERAMIC 0.1uF 25V
C948	1-104-851-11	s	TANTALUM, CHIP 10uF 20% 10V
C949	1-164-156-11	s	CERAMIC 0.1uF 25V
C950	1-164-156-11	s	CERAMIC 0.1uF 25V
C1001	1-104-851-11	s	TANTALUM, CHIP 10uF 20% 10V
C1002	1-162-919-11	s	CERAMIC, CHIP 22PF 5% 50V
C1003	1-164-156-11	s	CERAMIC 0.1uF 25V
C1004	1-107-686-11	s	CHIP, TANTALUM 4.7uF 20% 16V
C1005	1-104-851-11	s	TANTALUM, CHIP 10uF 20% 10V
C1006	1-104-851-11	s	TANTALUM, CHIP 10uF 20% 10V

(DM-110 BOARD)

Ref. No. or Q'ty	Part No.	SP	Description
C1008	1-162-919-11	s	CERAMIC, CHIP 22PF 5% 50V
C1009	1-162-970-11	s	CERAMIC, CHIP 0.01uF 10% 25V
C1010	1-104-851-11	s	TANTALUM, CHIP 10uF 20% 10V
C1011	1-104-852-11	s	TANTALUM, CHIP 22uF 20% 10V
C1012	1-162-970-11	s	CERAMIC, CHIP 0.01uF 10% 25V
C1013	1-162-908-11	s	CERAMIC 3PF 0.25PF 50V
C1014	1-164-156-11	s	CERAMIC 0.1uF 25V
C1015	1-162-907-11	s	CERAMIC, CHIP 2PF 50V
C1016	1-164-156-11	s	CERAMIC 0.1uF 25V
C1017	1-104-851-11	s	TANTALUM, CHIP 10uF 20% 10V
C1018	1-162-907-11	s	CERAMIC, CHIP 2PF 50V
C1019	1-164-156-11	s	CERAMIC 0.1uF 25V
C1020	1-162-966-11	s	CERAMIC, CHIP 0.0022uF 10% 50V
C1022	1-162-970-11	s	CERAMIC, CHIP 0.01uF 10% 25V
C1023	1-162-966-11	s	CERAMIC, CHIP 0.0022uF 10% 50V
C1024	1-162-966-11	s	CERAMIC, CHIP 0.0022uF 10% 50V
C1025	1-162-970-11	s	CERAMIC, CHIP 0.01uF 10% 25V
C1026	1-162-966-11	s	CERAMIC, CHIP 0.0022uF 10% 50V
C1027	1-162-966-11	s	CERAMIC, CHIP 0.0022uF 10% 50V
C1034	1-164-156-11	s	CERAMIC 0.1uF 25V
C1035	1-164-156-11	s	CERAMIC 0.1uF 25V
C1036	1-162-970-11	s	CERAMIC, CHIP 0.01uF 10% 25V
C1038	1-162-970-11	s	CERAMIC, CHIP 0.01uF 10% 25V
C1039	1-162-970-11	s	CERAMIC, CHIP 0.01uF 10% 25V
C1040	1-104-851-11	s	TANTALUM, CHIP 10uF 20% 10V
C1041	1-104-851-11	s	TANTALUM, CHIP 10uF 20% 10V
C1042	1-162-966-11	s	CERAMIC, CHIP 0.0022uF 10% 50V
C1043	1-162-927-11	s	CERAMIC, CHIP 100PF 5% 50V
C1044	1-162-970-11	s	CERAMIC, CHIP 0.01uF 10% 25V
CN2	1-766-703-11	s	CONNECTOR, COAXIAL
CN3	1-766-703-11	s	CONNECTOR, COAXIAL
CN4	1-766-703-11	s	CONNECTOR, COAXIAL
CN5	1-766-703-11	s	CONNECTOR, COAXIAL
CN6	1-766-703-11	s	CONNECTOR, COAXIAL
CN7	1-766-703-11	s	CONNECTOR, COAXIAL
CN8	1-766-703-11	s	CONNECTOR, COAXIAL
CP501	1-767-177-11	s	OSCILLATOR, CRYSTAL 22.500000MHZ
CP701	1-767-178-11	s	OSCILLATOR, CRYSTAL 45.000000MHZ
CV901	1-141-430-21	s	CAP, CHIP TRIMMER 6PF
D1	8-719-029-62	s	DIODE RD3.9UH-T1
D2	8-719-029-62	s	DIODE RD3.9UH-T1
D3	8-759-274-67	s	IC LM4040BIM3X-5.0
D4	8-719-974-39	s	DIODE HLMP-6300-010
D5	8-719-029-67	s	DIODE RD5.6UJN-T1
D6	8-719-029-67	s	DIODE RD5.6UJN-T1
D101	8-719-038-31	s	DIODE 1SS313-TE85L
D102	8-719-038-31	s	DIODE 1SS313-TE85L
D103	8-719-038-31	s	DIODE 1SS313-TE85L
D104	8-719-038-31	s	DIODE 1SS313-TE85L
D105	8-719-038-31	s	DIODE 1SS313-TE85L
D106	8-719-038-31	s	DIODE 1SS313-TE85L
D107	8-719-038-31	s	DIODE 1SS313-TE85L
D108	8-719-038-31	s	DIODE 1SS313-TE85L
D109	8-719-038-31	s	DIODE 1SS313-TE85L
D165	8-719-030-22	s	DIODE 1SV172-TE85L
D166	8-719-030-22	s	DIODE 1SV172-TE85L
D201	8-719-820-41	s	DIODE 1SS302

(DM-110 BOARD)

Ref. No. or Q'ty	Part No.	SP	Description
D202	8-719-948-47	s	DIODE HSM88AS
D203	8-719-948-47	s	DIODE HSM88AS
D204	8-719-820-41	s	DIODE 1SS302
D205	8-719-820-41	s	DIODE 1SS302
D301	8-719-038-31	s	DIODE 1SS313-TE85L
D302	8-719-038-31	s	DIODE 1SS313-TE85L
D303	8-719-038-31	s	DIODE 1SS313-TE85L
D304	8-719-038-31	s	DIODE 1SS313-TE85L
D305	8-719-038-31	s	DIODE 1SS313-TE85L
D306	8-719-038-31	s	DIODE 1SS313-TE85L
D307	8-719-038-31	s	DIODE 1SS313-TE85L
D308	8-719-038-31	s	DIODE 1SS313-TE85L
D309	8-719-038-31	s	DIODE 1SS313-TE85L
D365	8-719-030-22	s	DIODE 1SV172-TE85L
D366	8-719-030-22	s	DIODE 1SV172-TE85L
D501	8-719-820-41	s	DIODE 1SS302
D601	8-719-820-41	s	DIODE 1SS302
D602	8-719-059-59	s	DIODE MA3J74200LSO
D701	8-719-820-41	s	DIODE 1SS302
D801	8-719-820-41	s	DIODE 1SS302
D802	8-719-030-22	s	DIODE 1SV172-TE85L
D901	8-719-059-59	s	DIODE MA3J74200LSO
D902	8-719-820-41	s	DIODE 1SS302
D903	8-719-002-81	s	DIODE 1T363
D904	8-719-002-81	s	DIODE 1T363
D1001	8-719-059-59	s	DIODE MA3J74200LSO
D1002	8-719-820-41	s	DIODE 1SS302
DL601	1-415-832-11	s	DELAY LINE
FB901	1-543-775-11	s	FILTER, EMI
FB902	1-543-775-11	s	FILTER, EMI
FB1001	1-543-775-11	s	FILTER, EMI
FB1002	1-543-775-11	s	FILTER, EMI
FB1003	1-543-775-11	s	FILTER, EMI
FB1004	1-543-775-11	s	FILTER, EMI
FL101	1-233-700-11	s	FILTER (CABLE EQ)
FL301	1-233-701-11	s	FILTER (CABLE EQ)
FL501	1-239-948-11	s	FILTER, LOW-PASS (VIDEO)
FL502	1-239-944-11	s	FILTER, LOW-PASS
FL503	1-409-821-11	s	PHASE SHIFTER 90
FL601	1-239-950-11	s	FILTER, LOW-PASS (VIDEO)
FL701	1-239-951-11	s	FILTER, LOW-PASS (VIDEO)
FL702	1-239-946-11	s	FILTER, LOW-PASS
FL801	1-239-951-11	s	FILTER, LOW-PASS (VIDEO)
FL901	1-239-948-11	s	FILTER, LOW-PASS (VIDEO)
FL902	1-233-274-11	s	FILTER, BAND PASS
FL1001	1-239-948-11	s	FILTER, LOW-PASS (VIDEO)
FL1002	1-239-015-21	s	FILTER, BAND PASS
IC1	8-759-173-16	s	IC TL062CPW
IC3	8-759-147-84	s	IC CXD8072Q
IC4	8-759-082-58	s	IC TC7W08FU
IC5	8-759-635-27	s	IC M62352GP
IC6	8-759-926-25	s	IC SN74HC165ANS
IC7	8-759-926-25	s	IC SN74HC165ANS
IC101	8-759-173-16	s	IC TL062CPW
IC201	8-759-173-16	s	IC TL062CPW
IC202	8-759-066-59	s	IC TC74HC4053AFS
IC203	8-759-925-05	s	IC LM2903PS-E05

(DM-110 BOARD)

Ref. No. or Q'ty	Part No.	SP	Description
IC204	8-759-049-56	s	IC SN74HC02APW-E05
IC205	8-759-242-78	s	IC TC7W02F
IC206	8-759-009-41	s	IC MC14520BF
IC207	8-759-049-55	s	IC SN74HC00APW-E20
IC208	8-759-049-56	s	IC SN74HC02APW-E05
IC209	8-759-066-59	s	IC TC74HC4053AFS
IC210	8-759-066-59	s	IC TC74HC4053AFS
IC301	8-759-054-61	s	IC CLC505AJE
IC302	8-759-054-61	s	IC CLC505AJE
IC303	8-759-173-16	s	IC TL062CPW
IC401	8-759-176-91	s	IC M51348AFP
IC402	8-759-987-27	s	IC LM1881M
IC403	8-759-925-05	s	IC LM2903PS-E05
IC404	8-759-239-58	s	IC TC74HC221AF
IC405	8-759-239-58	s	IC TC74HC221AF
IC406	8-759-105-49	s	IC UPC319G2
IC501	8-759-271-18	s	IC NJM1496V
IC502	8-752-052-82	s	IC CXA1432M
IC503	8-759-173-16	s	IC TL062CPW
IC601	8-759-141-60	s	IC UPA101G
IC602	8-759-260-55	s	IC TLC272CPW-E05
IC603	8-759-085-67	s	IC LM339NS
IC701	8-759-141-60	s	IC UPA101G
IC702	8-759-082-53	s	IC TLC274CPW-E05
IC703	8-759-925-05	s	IC LM2903PS-E05
IC801	8-759-141-60	s	IC UPA101G
IC802	8-759-082-53	s	IC TLC274CPW-E05
IC901	8-759-082-61	s	IC TC4W53FU
IC902	8-759-076-06	s	IC TL064CPW
IC903	8-752-052-82	s	IC CXA1432M
IC1001	8-752-065-17	s	IC CXA1122AM-3-T4
IC1002	8-759-054-61	s	IC CLC505AJE
L1	1-412-032-11	s	INDUCTOR CHIP 100uH
L2	1-411-227-21	s	COIL, CHOKE 100UH
L3	1-411-227-21	s	COIL, CHOKE 100UH
L4	1-412-029-11	s	INDUCTOR CHIP 10uH
L101	1-412-029-11	s	INDUCTOR CHIP 10uH
L102	1-412-029-11	s	INDUCTOR CHIP 10uH
L103	1-410-381-11	s	INDUCTOR CHIP 10uH
L104	1-410-381-11	s	INDUCTOR CHIP 10uH
L105	1-410-381-11	s	INDUCTOR CHIP 10uH
L106	1-410-381-11	s	INDUCTOR CHIP 10uH
L107	1-410-381-11	s	INDUCTOR CHIP 10uH
L165	1-412-029-11	s	INDUCTOR CHIP 10uH
L166	1-412-029-11	s	INDUCTOR CHIP 10uH
L167	1-410-381-11	s	INDUCTOR CHIP 10uH
L168	1-410-381-11	s	INDUCTOR CHIP 10uH
L169	1-410-381-11	s	INDUCTOR CHIP 10uH
L201	1-412-029-11	s	INDUCTOR CHIP 10uH
L202	1-412-029-11	s	INDUCTOR CHIP 10uH
L301	1-412-029-11	s	INDUCTOR CHIP 10uH
L302	1-412-029-11	s	INDUCTOR CHIP 10uH
L303	1-410-381-11	s	INDUCTOR CHIP 10uH
L304	1-412-029-11	s	INDUCTOR CHIP 10uH
L305	1-412-029-11	s	INDUCTOR CHIP 10uH
L306	1-410-381-11	s	INDUCTOR CHIP 10uH
L307	1-412-029-11	s	INDUCTOR CHIP 10uH
L308	1-412-029-11	s	INDUCTOR CHIP 10uH

(DM-110 BOARD)

Ref. No. or Q'ty	Part No.	SP	Description
L309	1-410-381-11	s	INDUCTOR CHIP 10uH
L310	1-410-381-11	s	INDUCTOR CHIP 10uH
L311	1-410-381-11	s	INDUCTOR CHIP 10uH
L365	1-412-029-11	s	INDUCTOR CHIP 10uH
L366	1-412-029-11	s	INDUCTOR CHIP 10uH
L367	1-410-381-11	s	INDUCTOR CHIP 10uH
L368	1-410-381-11	s	INDUCTOR CHIP 10uH
L369	1-410-381-11	s	INDUCTOR CHIP 10uH
L401	1-412-029-11	s	INDUCTOR CHIP 10uH
L402	1-412-029-11	s	INDUCTOR CHIP 10uH
L501	1-412-029-11	s	INDUCTOR CHIP 10uH
L502	1-412-029-11	s	INDUCTOR CHIP 10uH
L503	1-412-029-11	s	INDUCTOR CHIP 10uH
L601	1-412-029-11	s	INDUCTOR CHIP 10uH
L602	1-412-029-11	s	INDUCTOR CHIP 10uH
L701	1-412-029-11	s	INDUCTOR CHIP 10uH
L702	1-412-029-11	s	INDUCTOR CHIP 10uH
L703	1-412-029-11	s	INDUCTOR CHIP 10uH
L801	1-412-029-11	s	INDUCTOR CHIP 10uH
L802	1-412-029-11	s	INDUCTOR CHIP 10uH
L803	1-410-381-11	s	INDUCTOR CHIP 10uH
L804	1-410-369-11	s	INDUCTOR CHIP 1UH
L805	1-410-381-11	s	INDUCTOR CHIP 10uH
L901	1-412-029-11	s	INDUCTOR CHIP 10uH
L902	1-412-029-11	s	INDUCTOR CHIP 10uH
L903	1-412-029-11	s	INDUCTOR CHIP 10uH
L904	1-412-029-11	s	INDUCTOR CHIP 10uH
L905	1-410-369-11	s	INDUCTOR CHIP 1UH
L906	1-410-136-11	s	INDUCTOR 3.3uH
L907	1-422-595-12	s	COIL, AIR CORE
L908	1-422-594-11	s	COIL, AIR CORE
L1001	1-412-029-11	s	INDUCTOR CHIP 10uH
L1002	1-412-029-11	s	INDUCTOR CHIP 10uH
L1004	1-409-840-11	s	COIL, BALUN
LV401	1-411-920-21	s	COIL, VARIABLE 78PF
Q1	8-729-101-07	s	TRANSISTOR 2SB798
Q2	8-729-807-51	s	TRANSISTOR 2SD1623-S
Q3	8-729-117-32	s	TRANSISTOR 2SC4177
Q4	8-729-117-16	s	TRANSISTOR 2SA1611-M6
Q101	8-729-144-07	s	TRANSISTOR 2SC4184-T43
Q102	8-729-117-16	s	TRANSISTOR 2SA1611-M6
Q103	8-729-144-07	s	TRANSISTOR 2SC4184-T43
Q104	8-729-144-07	s	TRANSISTOR 2SC4184-T43
Q105	8-729-144-07	s	TRANSISTOR 2SC4184-T43
Q106	8-729-144-07	s	TRANSISTOR 2SC4184-T43
Q107	8-729-117-16	s	TRANSISTOR 2SA1611-M6
Q108	8-729-144-07	s	TRANSISTOR 2SC4184-T43
Q109	8-729-144-07	s	TRANSISTOR 2SC4184-T43
Q110	8-729-144-07	s	TRANSISTOR 2SC4184-T43
Q111	8-729-144-07	s	TRANSISTOR 2SC4184-T43
Q165	8-729-144-07	s	TRANSISTOR 2SC4184-T43
Q166	8-729-144-07	s	TRANSISTOR 2SC4184-T43
Q167	8-729-144-07	s	TRANSISTOR 2SC4184-T43
Q168	8-729-024-56	s	TRANSISTOR 2SA1808
Q169	8-729-024-58	s	TRANSISTOR 2SA1688-5
Q201	8-729-024-56	s	TRANSISTOR 2SA1808
Q202	8-729-230-38	s	TRANSISTOR 2SC4215Y
Q301	8-729-144-07	s	TRANSISTOR 2SC4184-T43

(DM-110 BOARD)

Ref. No. or Q'ty	Part No.	SP	Description
Q302	8-729-117-16	s	TRANSISTOR 2SA1611-M6
Q303	8-729-144-07	s	TRANSISTOR 2SC4184-T43
Q304	8-729-144-07	s	TRANSISTOR 2SC4184-T43
Q305	8-729-144-07	s	TRANSISTOR 2SC4184-T43
Q306	8-729-117-16	s	TRANSISTOR 2SA1611-M6
Q307	8-729-144-07	s	TRANSISTOR 2SC4184-T43
Q308	8-729-144-07	s	TRANSISTOR 2SC4184-T43
Q309	8-729-144-07	s	TRANSISTOR 2SC4184-T43
Q365	8-729-144-07	s	TRANSISTOR 2SC4184-T43
Q366	8-729-144-07	s	TRANSISTOR 2SC4184-T43
Q367	8-729-144-07	s	TRANSISTOR 2SC4184-T43
Q368	8-729-144-07	s	TRANSISTOR 2SC4184-T43
Q369	8-729-144-07	s	TRANSISTOR 2SC4184-T43
Q370	8-729-144-07	s	TRANSISTOR 2SC4184-T43
Q371	8-729-144-07	s	TRANSISTOR 2SC4184-T43
Q372	8-729-024-58	s	TRANSISTOR 2SA1688-5
Q401	8-729-024-58	s	TRANSISTOR 2SA1688-5
Q402	8-729-024-58	s	TRANSISTOR 2SA1688-5
Q403	8-729-024-58	s	TRANSISTOR 2SA1688-5
Q404	8-729-143-07	s	TRANSISTOR 2SA1610-Y33
Q501	8-729-024-58	s	TRANSISTOR 2SA1688-5
Q502	8-729-117-32	s	TRANSISTOR 2SC4177
Q503	8-729-117-32	s	TRANSISTOR 2SC4177
Q504	8-729-117-32	s	TRANSISTOR 2SC4177
Q505	8-729-118-58	s	TRANSISTOR 2SK852-X4
Q506	8-729-118-58	s	TRANSISTOR 2SK852-X4
Q507	8-729-117-32	s	TRANSISTOR 2SC4177
Q508	8-729-117-16	s	TRANSISTOR 2SA1611-M6
Q509	8-729-117-32	s	TRANSISTOR 2SC4177
Q510	8-729-117-16	s	TRANSISTOR 2SA1611-M6
Q511	8-729-117-32	s	TRANSISTOR 2SC4177
Q512	8-729-230-38	s	TRANSISTOR 2SC4215Y
Q601	8-729-117-32	s	TRANSISTOR 2SC4177
Q602	8-729-230-38	s	TRANSISTOR 2SC4215Y
Q603	8-729-024-58	s	TRANSISTOR 2SA1688-5
Q604	8-729-024-58	s	TRANSISTOR 2SA1688-5
Q605	8-729-144-07	s	TRANSISTOR 2SC4184-T43
Q606	8-729-026-32	s	TRANSISTOR XP6534
Q607	8-729-230-38	s	TRANSISTOR 2SC4215Y
Q609	8-729-024-56	s	TRANSISTOR 2SA1808
Q610	8-729-117-32	s	TRANSISTOR 2SC4177
Q611	8-729-116-64	s	TRANSISTOR 2SK508-K51
Q612	8-729-116-64	s	TRANSISTOR 2SK508-K51
Q613	8-729-117-32	s	TRANSISTOR 2SC4177
Q701	8-729-117-32	s	TRANSISTOR 2SC4177
Q702	8-729-230-38	s	TRANSISTOR 2SC4215Y
Q703	8-729-024-58	s	TRANSISTOR 2SA1688-5
Q704	8-729-230-38	s	TRANSISTOR 2SC4215Y
Q705	8-729-026-32	s	TRANSISTOR XP6534
Q706	8-729-230-38	s	TRANSISTOR 2SC4215Y
Q708	8-729-024-56	s	TRANSISTOR 2SA1808
Q709	8-729-117-32	s	TRANSISTOR 2SC4177
Q710	8-729-118-58	s	TRANSISTOR 2SK852-X4
Q711	8-729-116-64	s	TRANSISTOR 2SK508-K51
Q712	8-729-116-64	s	TRANSISTOR 2SK508-K51
Q713	8-729-117-32	s	TRANSISTOR 2SC4177
Q714	8-729-230-38	s	TRANSISTOR 2SC4215Y
Q715	8-729-024-58	s	TRANSISTOR 2SA1688-5
Q801	8-729-117-32	s	TRANSISTOR 2SC4177

(DM-110 BOARD)

Ref. No. or Q'ty	Part No.	SP	Description
Q802	8-729-230-38	s	TRANSISTOR 2SC4215Y
Q803	8-729-116-64	s	TRANSISTOR 2SK508-K51
Q804	8-729-230-38	s	TRANSISTOR 2SC4215Y
Q805	8-729-024-58	s	TRANSISTOR 2SA1688-5
Q806	8-729-230-38	s	TRANSISTOR 2SC4215Y
Q807	8-729-026-32	s	TRANSISTOR XP6534
Q808	8-729-230-38	s	TRANSISTOR 2SC4215Y
Q810	8-729-024-56	s	TRANSISTOR 2SA1808
Q811	8-729-117-32	s	TRANSISTOR 2SC4177
Q812	8-729-118-58	s	TRANSISTOR 2SK852-X4
Q813	8-729-116-64	s	TRANSISTOR 2SK508-K51
Q814	8-729-116-64	s	TRANSISTOR 2SK508-K51
Q815	8-729-024-58	s	TRANSISTOR 2SA1688-5
Q816	8-729-144-07	s	TRANSISTOR 2SC4184-T43
Q901	8-729-026-31	s	TRANSISTOR XP6435
Q902	8-729-026-32	s	TRANSISTOR XP6534
Q903	8-729-026-31	s	TRANSISTOR XP6435
Q904	8-729-026-31	s	TRANSISTOR XP6435
Q905	8-729-026-32	s	TRANSISTOR XP6534
Q906	8-729-117-16	s	TRANSISTOR 2SA1611-M6
Q907	8-729-117-32	s	TRANSISTOR 2SC4177
Q908	8-729-117-16	s	TRANSISTOR 2SA1611-M6
Q909	8-729-117-32	s	TRANSISTOR 2SC4177
Q910	8-729-144-07	s	TRANSISTOR 2SC4184-T43
Q911	8-729-144-07	s	TRANSISTOR 2SC4184-T43
Q912	8-729-144-07	s	TRANSISTOR 2SC4184-T43
Q913	8-729-144-07	s	TRANSISTOR 2SC4184-T43
Q914	8-729-144-07	s	TRANSISTOR 2SC4184-T43
Q915	8-729-144-07	s	TRANSISTOR 2SC4184-T43
Q916	8-729-144-07	s	TRANSISTOR 2SC4184-T43
Q917	8-729-230-38	s	TRANSISTOR 2SC4215Y
Q918	8-729-024-58	s	TRANSISTOR 2SA1688-5
Q919	8-729-144-07	s	TRANSISTOR 2SC4184-T43
Q920	8-729-230-38	s	TRANSISTOR 2SC4215Y
Q921	8-729-024-58	s	TRANSISTOR 2SA1688-5
Q922	8-729-144-07	s	TRANSISTOR 2SC4184-T43
Q1001	8-729-117-32	s	TRANSISTOR 2SC4177
Q1002	8-729-117-32	s	TRANSISTOR 2SC4177
Q1003	8-729-029-14	s	TRANSISTOR DTC144EUA-T106
Q1004	8-729-028-91	s	TRANSISTOR DTA144EUA-T106
Q1005	8-729-216-22	s	TRANSISTOR 2SA1162
Q1006	8-729-117-32	s	TRANSISTOR 2SC4177
Q1007	8-729-117-16	s	TRANSISTOR 2SA1611-M6
Q1010	8-729-144-07	s	TRANSISTOR 2SC4184-T43
Q1011	8-729-144-07	s	TRANSISTOR 2SC4184-T43
R1	1-218-692-11	s	CHIP, METAL 1K 0.50% 1/16W
R2	1-218-692-11	s	CHIP, METAL 1K 0.50% 1/16W
R3	1-218-724-11	s	METAL 22K 0.50% 1/16W
R4	1-218-708-11	s	METAL 4.7K 0.50% 1/16W
R5	1-218-726-11	s	METAL, CHIP 27K 0.50% 1/16W
R6	1-218-724-11	s	METAL 22K 0.50% 1/16W
R7	1-218-724-11	s	METAL 22K 0.50% 1/16W
R8	1-216-845-11	s	METAL, CHIP 100K 5% 1/16W
R9	1-216-809-11	s	METAL, CHIP 100 5% 1/16W
R10	1-216-845-11	s	METAL, CHIP 100K 5% 1/16W
R11	1-216-809-11	s	METAL, CHIP 100 5% 1/16W
R12	1-216-845-11	s	METAL, CHIP 100K 5% 1/16W
R13	1-216-809-11	s	METAL, CHIP 100 5% 1/16W
R14	1-218-692-11	s	CHIP, METAL 1K 0.50% 1/16W

(DM-110 BOARD)

Ref. No. or Q'ty	Part No.	SP	Description
R15	1-216-845-11	s	METAL, CHIP 100K 5% 1/16W
R16	1-216-864-11	s	METAL, CHIP 0 5% 1/16W
R18	1-216-864-11	s	METAL, CHIP 0 5% 1/16W
R20	1-216-845-11	s	METAL, CHIP 100K 5% 1/16W
R21	1-218-724-11	s	METAL 22K 0.50% 1/16W
R22	1-218-676-11	s	METAL 220 0.50% 1/16W
R23	1-218-724-11	s	METAL 22K 0.50% 1/16W
R24	1-218-724-11	s	METAL 22K 0.50% 1/16W
R25	1-218-724-11	s	METAL 22K 0.50% 1/16W
R26	1-218-724-11	s	METAL 22K 0.50% 1/16W
R101	1-218-665-11	s	METAL, CHIP 75 0.50% 1/16W
R102	1-216-833-11	s	METAL, CHIP 10K 5% 1/16W
R103	1-218-728-11	s	METAL 33K 0.50% 1/16W
R104	1-218-696-11	s	METAL, CHIP 1.5K 0.50% 1/16W
R105	1-218-704-11	s	METAL 3.3K 0.50% 1/16W
R106	1-218-644-11	s	METAL 10 0.50% 1/16W
R107	1-216-833-11	s	METAL, CHIP 10K 5% 1/16W
R108	1-218-732-11	s	METAL 47K 0.50% 1/16W
R109	1-218-679-91	s	CHIP, METAL 300 0.50% 1/16W
R110	1-218-692-11	s	CHIP, METAL 1K 0.50% 1/16W
R111	1-218-704-11	s	METAL 3.3K 0.50% 1/16W
R112	1-218-700-11	s	METAL 2.2K 0.50% 1/16W
R113	1-218-665-11	s	METAL, CHIP 75 0.50% 1/16W
R114	1-218-716-11	s	METAL 10K 0.50% 1/16W
R116	1-218-692-11	s	CHIP, METAL 1K 0.50% 1/16W
R117	1-218-712-11	s	METAL 6.8K 0.50% 1/16W
R118	1-218-700-11	s	METAL 2.2K 0.50% 1/16W
R119	1-218-696-11	s	METAL, CHIP 1.5K 0.50% 1/16W
R120	1-218-712-11	s	METAL 6.8K 0.50% 1/16W
R121	1-218-679-91	s	CHIP, METAL 300 0.50% 1/16W
R122	1-218-708-11	s	METAL 4.7K 0.50% 1/16W
R125	1-218-644-11	s	METAL 10 0.50% 1/16W
R126	1-218-677-11	s	METAL 240 0.50% 1/16W
R127	1-218-704-11	s	METAL 3.3K 0.50% 1/16W
R129	1-218-728-11	s	METAL 33K 0.50% 1/16W
R130	1-218-677-11	s	METAL 240 0.50% 1/16W
R131	1-218-692-11	s	CHIP, METAL 1K 0.50% 1/16W
R132	1-218-704-11	s	METAL 3.3K 0.50% 1/16W
R133	1-218-700-11	s	METAL 2.2K 0.50% 1/16W
R134	1-218-644-11	s	METAL 10 0.50% 1/16W
R135	1-218-709-11	s	METAL 5.1K 0.50% 1/16W
R137	1-218-692-11	s	CHIP, METAL 1K 0.50% 1/16W
R138	1-218-716-11	s	METAL 10K 0.50% 1/16W
R139	1-218-700-11	s	METAL 2.2K 0.50% 1/16W
R140	1-218-700-11	s	METAL 2.2K 0.50% 1/16W
R141	1-218-704-11	s	METAL 3.3K 0.50% 1/16W
R142	1-218-676-11	s	METAL 220 0.50% 1/16W
R143	1-218-700-11	s	METAL 2.2K 0.50% 1/16W
R146	1-218-676-11	s	METAL 220 0.50% 1/16W
R147	1-218-706-11	s	METAL 3.9K 0.50% 1/16W
R148	1-218-706-11	s	METAL 3.9K 0.50% 1/16W
R149	1-218-704-11	s	METAL 3.3K 0.50% 1/16W
R150	1-218-704-11	s	METAL 3.3K 0.50% 1/16W
R165	1-218-681-11	s	METAL, CHIP 360 0.50% 1/16W
R166	1-218-691-11	s	METAL, CHIP 910 0.50% 1/16W
R167	1-218-678-11	s	METAL, CHIP 270 0.50% 1/16W
R168	1-218-690-11	s	METAL, CHIP 820 0.50% 1/16W
R169	1-218-678-11	s	METAL, CHIP 270 0.50% 1/16W
R170	1-218-678-11	s	METAL, CHIP 270 0.50% 1/16W

(DM-110 BOARD)

Ref. No. or Q'ty	Part No.	SP	Description
R171	1-218-714-11	s	METAL 8.2K 0.50% 1/16W
R172	1-218-699-11	s	CHIP, METAL 2K 0.50% 1/16W
R173	1-218-706-11	s	METAL 3.9K 0.50% 1/16W
R174	1-218-706-11	s	METAL 3.9K 0.50% 1/16W
R175	1-216-809-11	s	METAL, CHIP 100 5% 1/16W
R176	1-218-702-11	s	CHIP, METAL 2.7K 0.50% 1/16W
R177	1-218-706-11	s	METAL 3.9K 0.50% 1/16W
R178	1-216-833-11	s	METAL, CHIP 10K 5% 1/16W
R179	1-216-853-11	s	METAL, CHIP 470K 5% 1/16W
R180	1-216-863-11	s	METAL 3.3M 5% 1/16W
R181	1-216-845-11	s	METAL, CHIP 100K 5% 1/16W
R182	1-216-833-11	s	METAL, CHIP 10K 5% 1/16W
R183	1-216-857-11	s	METAL, CHIP 1M 5% 1/16W
R184	1-218-724-11	s	METAL 22K 0.50% 1/16W
R185	1-218-728-11	s	METAL 33K 0.50% 1/16W
R186	1-216-857-11	s	METAL, CHIP 1M 5% 1/16W
R201	1-218-700-11	s	METAL 2.2K 0.50% 1/16W
R202	1-218-708-11	s	METAL 4.7K 0.50% 1/16W
R203	1-218-686-11	s	METAL 560 0.50% 1/16W
R204	1-218-694-11	s	CHIP, METAL 1.2K 0.50% 1/16W
R205	1-218-700-11	s	METAL 2.2K 0.50% 1/16W
R206	1-216-845-11	s	METAL, CHIP 100K 5% 1/16W
R207	1-216-863-11	s	METAL 3.3M 5% 1/16W
R208	1-218-708-11	s	METAL 4.7K 0.50% 1/16W
R209	1-218-694-11	s	CHIP, METAL 1.2K 0.50% 1/16W
R210	1-218-710-11	s	CHIP, METAL 5.6K 0.50% 1/16W
R211	1-216-833-11	s	METAL, CHIP 10K 5% 1/16W
R212	1-218-710-11	s	CHIP, METAL 5.6K 0.50% 1/16W
R213	1-218-705-11	s	METAL 3.6K 0.50% 1/16W
R214	1-218-683-11	s	METAL, CHIP 430 0.50% 1/16W
R215	1-218-689-11	s	METAL, CHIP 750 0.50% 1/16W
R216	1-218-701-11	s	METAL 2.4K 0.50% 1/16W
R217	1-216-833-11	s	METAL, CHIP 10K 5% 1/16W
R218	1-218-724-11	s	METAL 22K 0.50% 1/16W
R219	1-216-833-11	s	METAL, CHIP 10K 5% 1/16W
R220	1-218-716-11	s	METAL 10K 0.50% 1/16W
R221	1-216-857-11	s	METAL, CHIP 1M 5% 1/16W
R222	1-218-724-11	s	METAL 22K 0.50% 1/16W
R223	1-218-716-11	s	METAL 10K 0.50% 1/16W
R225	1-216-864-11	s	METAL, CHIP 0 5% 1/16W
R226	1-216-845-11	s	METAL, CHIP 100K 5% 1/16W
R227	1-216-845-11	s	METAL, CHIP 100K 5% 1/16W
R228	1-216-833-11	s	METAL, CHIP 10K 5% 1/16W
R229	1-216-833-11	s	METAL, CHIP 10K 5% 1/16W
R230	1-218-748-11	s	METAL 220K 0.50% 1/16W
R231	1-218-745-11	s	METAL 160K 0.50% 1/16W
R232	1-218-718-11	s	METAL 12K 0.50% 1/16W
R233	1-218-736-11	s	METAL 68K 0.50% 1/16W
R234	1-216-864-11	s	METAL, CHIP 0 5% 1/16W
R235	1-218-715-11	s	METAL 9.1K 0.50% 1/16W
R236	1-218-674-11	s	METAL 180 0.50% 1/16W
R237	1-218-671-11	s	METAL 130 0.50% 1/16W
R301	1-218-668-11	s	METAL 100 0.50% 1/16W
R302	1-216-833-11	s	METAL, CHIP 10K 5% 1/16W
R303	1-218-728-11	s	METAL 33K 0.50% 1/16W
R304	1-218-692-11	s	CHIP, METAL 1K 0.50% 1/16W
R305	1-218-702-11	s	CHIP, METAL 2.7K 0.50% 1/16W
R306	1-218-644-11	s	METAL 10 0.50% 1/16W
R307	1-216-833-11	s	METAL, CHIP 10K 5% 1/16W

(DM-110 BOARD)

Ref. No. or Q'ty	Part No.	SP	Description
R308	1-218-728-11	s	METAL 33K 0.50% 1/16W
R309	1-218-680-11	s	METAL 330 0.50% 1/16W
R310	1-218-690-11	s	METAL, CHIP 820 0.50% 1/16W
R311	1-218-702-11	s	CHIP, METAL 2.7K 0.50% 1/16W
R312	1-218-702-11	s	CHIP, METAL 2.7K 0.50% 1/16W
R313	1-218-692-11	s	CHIP, METAL 1K 0.50% 1/16W
R314	1-218-712-11	s	METAL 6.8K 0.50% 1/16W
R315	1-218-696-11	s	METAL, CHIP 1.5K 0.50% 1/16W
R316	1-218-692-11	s	CHIP, METAL 1K 0.50% 1/16W
R317	1-216-809-11	s	METAL, CHIP 100 5% 1/16W
R318	1-218-696-11	s	METAL, CHIP 1.5K 0.50% 1/16W
R319	1-218-744-11	s	METAL 150K 0.50% 1/16W
R320	1-218-679-91	s	CHIP, METAL 300 0.50% 1/16W
R321	1-218-705-11	s	METAL 3.6K 0.50% 1/16W
R324	1-218-644-11	s	METAL 10 0.50% 1/16W
R325	1-218-677-11	s	METAL 240 0.50% 1/16W
R326	1-218-706-11	s	METAL 3.9K 0.50% 1/16W
R328	1-218-726-11	s	METAL, CHIP 27K 0.50% 1/16W
R329	1-218-677-11	s	METAL 240 0.50% 1/16W
R330	1-218-688-11	s	METAL 680 0.50% 1/16W
R331	1-218-702-11	s	CHIP, METAL 2.7K 0.50% 1/16W
R332	1-218-702-11	s	CHIP, METAL 2.7K 0.50% 1/16W
R333	1-218-692-11	s	CHIP, METAL 1K 0.50% 1/16W
R334	1-218-712-11	s	METAL 6.8K 0.50% 1/16W
R335	1-218-694-11	s	CHIP, METAL 1.2K 0.50% 1/16W
R336	1-218-692-11	s	CHIP, METAL 1K 0.50% 1/16W
R337	1-216-809-11	s	METAL, CHIP 100 5% 1/16W
R338	1-218-699-11	s	CHIP, METAL 2K 0.50% 1/16W
R339	1-218-744-11	s	METAL 150K 0.50% 1/16W
R340	1-218-676-11	s	METAL 220 0.50% 1/16W
R341	1-218-696-11	s	METAL, CHIP 1.5K 0.50% 1/16W
R344	1-218-676-11	s	METAL 220 0.50% 1/16W
R345	1-218-704-11	s	METAL 3.3K 0.50% 1/16W
R346	1-218-704-11	s	METAL 3.3K 0.50% 1/16W
R347	1-218-702-11	s	CHIP, METAL 2.7K 0.50% 1/16W
R348	1-218-702-11	s	CHIP, METAL 2.7K 0.50% 1/16W
R365	1-218-679-91	s	CHIP, METAL 300 0.50% 1/16W
R366	1-218-692-11	s	CHIP, METAL 1K 0.50% 1/16W
R367	1-218-679-91	s	CHIP, METAL 300 0.50% 1/16W
R368	1-218-692-11	s	CHIP, METAL 1K 0.50% 1/16W
R369	1-218-679-91	s	CHIP, METAL 300 0.50% 1/16W
R370	1-218-679-91	s	CHIP, METAL 300 0.50% 1/16W
R371	1-218-704-11	s	METAL 3.3K 0.50% 1/16W
R372	1-218-694-11	s	CHIP, METAL 1.2K 0.50% 1/16W
R373	1-218-706-11	s	METAL 3.9K 0.50% 1/16W
R374	1-218-710-11	s	CHIP, METAL 5.6K 0.50% 1/16W
R376	1-218-694-11	s	CHIP, METAL 1.2K 0.50% 1/16W
R377	1-218-706-11	s	METAL 3.9K 0.50% 1/16W
R378	1-218-692-11	s	CHIP, METAL 1K 0.50% 1/16W
R379	1-218-701-11	s	METAL 2.4K 0.50% 1/16W
R380	1-218-709-11	s	METAL 5.1K 0.50% 1/16W
R381	1-218-699-11	s	CHIP, METAL 2K 0.50% 1/16W
R382	1-218-710-11	s	CHIP, METAL 5.6K 0.50% 1/16W
R383	1-218-708-11	s	METAL 4.7K 0.50% 1/16W
R384	1-218-716-11	s	METAL 10K 0.50% 1/16W
R385	1-218-718-11	s	METAL 12K 0.50% 1/16W
R386	1-216-833-11	s	METAL, CHIP 10K 5% 1/16W
R387	1-216-857-11	s	METAL, CHIP 1M 5% 1/16W
R388	1-216-845-11	s	METAL, CHIP 100K 5% 1/16W

(DM-110 BOARD)

Ref. No. or Q'ty	Part No.	SP	Description
R389	1-216-833-11	s	METAL, CHIP 10K 5% 1/16W
R390	1-216-854-11	s	METAL, CHIP 560K 5% 1/16W
R391	1-218-724-11	s	METAL 22K 0.50% 1/16W
R392	1-218-726-11	s	METAL, CHIP 27K 0.50% 1/16W
R393	1-216-857-11	s	METAL, CHIP 1M 5% 1/16W
R394	1-218-688-11	s	METAL 680 0.50% 1/16W
R401	1-218-676-11	s	METAL 220 0.50% 1/16W
R402	1-218-708-11	s	METAL 4.7K 0.50% 1/16W
R403	1-218-721-11	s	METAL 16K 0.50% 1/16W
R404	1-218-688-11	s	METAL 680 0.50% 1/16W
R405	1-218-704-11	s	METAL 3.3K 0.50% 1/16W
R406	1-218-684-11	s	CHIP, METAL 470 0.50% 1/16W
R407	1-216-855-11	s	METAL, CHIP 680K 5% 1/16W
R408	1-218-708-11	s	METAL 4.7K 0.50% 1/16W
R409	1-218-702-11	s	CHIP, METAL 2.7K 0.50% 1/16W
R410	1-216-809-11	s	METAL, CHIP 100 5% 1/16W
R411	1-216-833-11	s	METAL, CHIP 10K 5% 1/16W
R412	1-218-710-11	s	CHIP, METAL 5.6K 0.50% 1/16W
R413	1-218-700-11	s	METAL 2.2K 0.50% 1/16W
R414	1-218-748-11	s	METAL 220K 0.50% 1/16W
R415	1-216-809-11	s	METAL, CHIP 100 5% 1/16W
R416	1-218-698-11	s	METAL 1.8K 0.50% 1/16W
R417	1-218-724-11	s	METAL 22K 0.50% 1/16W
R418	1-218-710-11	s	CHIP, METAL 5.6K 0.50% 1/16W
R419	1-218-710-11	s	CHIP, METAL 5.6K 0.50% 1/16W
R420	1-218-721-11	s	METAL 16K 0.50% 1/16W
R421	1-216-833-11	s	METAL, CHIP 10K 5% 1/16W
R422	1-218-710-11	s	CHIP, METAL 5.6K 0.50% 1/16W
R423	1-216-833-11	s	METAL, CHIP 10K 5% 1/16W
R424	1-218-692-11	s	CHIP, METAL 1K 0.50% 1/16W
R425	1-216-833-11	s	METAL, CHIP 10K 5% 1/16W
R426	1-216-833-11	s	METAL, CHIP 10K 5% 1/16W
R427	1-218-700-11	s	METAL 2.2K 0.50% 1/16W
R428	1-218-708-11	s	METAL 4.7K 0.50% 1/16W
R429	1-216-864-11	s	METAL, CHIP 0 5% 1/16W
R430	1-218-707-11	s	METAL 4.3K 0.50% 1/16W
R431	1-216-809-11	s	METAL, CHIP 100 5% 1/16W
R432	1-216-864-11	s	METAL, CHIP 0 5% 1/16W
R433	1-218-692-11	s	CHIP, METAL 1K 0.50% 1/16W
R434	1-218-716-11	s	METAL 10K 0.50% 1/16W
R435	1-218-689-11	s	METAL, CHIP 750 0.50% 1/16W
R436	1-218-716-11	s	METAL 10K 0.50% 1/16W
R437	1-216-809-11	s	METAL, CHIP 100 5% 1/16W
R438	1-216-864-11	s	METAL, CHIP 0 5% 1/16W
R439	1-218-716-11	s	METAL 10K 0.50% 1/16W
R440	1-218-708-11	s	METAL 4.7K 0.50% 1/16W
R441	1-218-732-11	s	METAL 47K 0.50% 1/16W
R442	1-218-732-11	s	METAL 47K 0.50% 1/16W
R501	1-218-688-11	s	METAL 680 0.50% 1/16W
R502	1-218-692-11	s	CHIP, METAL 1K 0.50% 1/16W
R503	1-218-692-11	s	CHIP, METAL 1K 0.50% 1/16W
R504	1-218-711-11	s	METAL 6.2K 0.50% 1/16W
R505	1-218-692-11	s	CHIP, METAL 1K 0.50% 1/16W
R506	1-218-692-11	s	CHIP, METAL 1K 0.50% 1/16W
R507	1-218-702-11	s	CHIP, METAL 2.7K 0.50% 1/16W
R508	1-216-809-11	s	METAL, CHIP 100 5% 1/16W
R509	1-216-809-11	s	METAL, CHIP 100 5% 1/16W
R510	1-218-710-11	s	CHIP, METAL 5.6K 0.50% 1/16W
R511	1-216-809-11	s	METAL, CHIP 100 5% 1/16W

(DM-110 BOARD)

Ref. No. or Q'ty	Part No.	SP	Description
R512	1-218-700-11	s	METAL 2.2K 0.50% 1/16W
R513	1-216-809-11	s	METAL, CHIP 100 5% 1/16W
R514	1-218-724-11	s	METAL 22K 0.50% 1/16W
R515	1-218-684-11	s	CHIP, METAL 470 0.50% 1/16W
R516	1-218-706-11	s	METAL 3.9K 0.50% 1/16W
R517	1-218-692-11	s	CHIP, METAL 1K 0.50% 1/16W
R518	1-218-705-11	s	METAL 3.6K 0.50% 1/16W
R519	1-218-716-11	s	METAL 10K 0.50% 1/16W
R520	1-218-722-11	s	METAL, CHIP 18K 0.50% 1/16W
R521	1-218-700-11	s	METAL 2.2K 0.50% 1/16W
R522	1-218-692-11	s	CHIP, METAL 1K 0.50% 1/16W
R523	1-218-710-11	s	CHIP, METAL 5.6K 0.50% 1/16W
R524	1-218-692-11	s	CHIP, METAL 1K 0.50% 1/16W
R525	1-218-708-11	s	METAL 4.7K 0.50% 1/16W
R526	1-218-700-11	s	METAL 2.2K 0.50% 1/16W
R527	1-218-716-11	s	METAL 10K 0.50% 1/16W
R528	1-218-716-11	s	METAL 10K 0.50% 1/16W
R529	1-218-732-11	s	METAL 47K 0.50% 1/16W
R533	1-216-809-11	s	METAL, CHIP 100 5% 1/16W
R534	1-218-708-11	s	METAL 4.7K 0.50% 1/16W
R535	1-216-809-11	s	METAL, CHIP 100 5% 1/16W
R536	1-216-809-11	s	METAL, CHIP 100 5% 1/16W
R537	1-218-733-11	s	METAL 51K 0.50% 1/16W
R538	1-216-833-11	s	METAL, CHIP 10K 5% 1/16W
R539	1-216-863-11	s	METAL 3.3M 5% 1/16W
R540	1-218-733-11	s	METAL 51K 0.50% 1/16W
R541	1-216-833-11	s	METAL, CHIP 10K 5% 1/16W
R542	1-218-724-11	s	METAL 22K 0.50% 1/16W
R543	1-218-748-11	s	METAL 220K 0.50% 1/16W
R544	1-218-692-11	s	CHIP, METAL 1K 0.50% 1/16W
R545	1-216-863-11	s	METAL 3.3M 5% 1/16W
R546	1-218-692-11	s	CHIP, METAL 1K 0.50% 1/16W
R547	1-218-732-11	s	METAL 47K 0.50% 1/16W
R548	1-218-748-11	s	METAL 220K 0.50% 1/16W
R549	1-218-724-11	s	METAL 22K 0.50% 1/16W
R550	1-216-833-11	s	METAL, CHIP 10K 5% 1/16W
R551	1-218-714-11	s	METAL 8.2K 0.50% 1/16W
R552	1-218-710-11	s	CHIP, METAL 5.6K 0.50% 1/16W
R553	1-218-718-11	s	METAL 12K 0.50% 1/16W
R554	1-218-719-11	s	METAL 13K 0.50% 1/16W
R555	1-218-714-11	s	METAL 8.2K 0.50% 1/16W
R556	1-218-719-11	s	METAL 13K 0.50% 1/16W
R557	1-218-722-11	s	METAL, CHIP 18K 0.50% 1/16W
R558	1-218-712-11	s	METAL 6.8K 0.50% 1/16W
R559	1-218-684-11	s	CHIP, METAL 470 0.50% 1/16W
R560	1-218-698-11	s	METAL 1.8K 0.50% 1/16W
R561	1-218-684-11	s	CHIP, METAL 470 0.50% 1/16W
R562	1-218-694-11	s	CHIP, METAL 1.2K 0.50% 1/16W
R563	1-218-696-11	s	METAL, CHIP 1.5K 0.50% 1/16W
R564	1-218-684-11	s	CHIP, METAL 470 0.50% 1/16W
R565	1-218-684-11	s	CHIP, METAL 470 0.50% 1/16W
R566	1-218-692-11	s	CHIP, METAL 1K 0.50% 1/16W
R567	1-218-716-11	s	METAL 10K 0.50% 1/16W
R568	1-218-719-11	s	METAL 13K 0.50% 1/16W
R601	1-218-684-11	s	CHIP, METAL 470 0.50% 1/16W
R602	1-218-711-11	s	METAL 6.2K 0.50% 1/16W
R603	1-218-692-11	s	CHIP, METAL 1K 0.50% 1/16W
R604	1-218-692-11	s	CHIP, METAL 1K 0.50% 1/16W
R605	1-218-702-11	s	CHIP, METAL 2.7K 0.50% 1/16W

(DM-110 BOARD)

Ref. No. or Q'ty	Part No.	SP	Description
R606	1-216-809-11	s	METAL, CHIP 100 5% 1/16W
R607	1-216-809-11	s	METAL, CHIP 100 5% 1/16W
R608	1-218-710-11	s	CHIP, METAL 5.6K 0.50% 1/16W
R609	1-218-724-11	s	METAL 22K 0.50% 1/16W
R610	1-216-809-11	s	METAL, CHIP 100 5% 1/16W
R611	1-218-700-11	s	METAL 2.2K 0.50% 1/16W
R612	1-216-809-11	s	METAL, CHIP 100 5% 1/16W
R613	1-218-704-11	s	METAL 3.3K 0.50% 1/16W
R614	1-218-692-11	s	CHIP, METAL 1K 0.50% 1/16W
R615	1-218-676-11	s	METAL 220 0.50% 1/16W
R616	1-218-680-11	s	METAL 330 0.50% 1/16W
R617	1-218-676-11	s	METAL 220 0.50% 1/16W
R618	1-218-685-11	s	METAL 510 0.50% 1/16W
R619	1-218-685-11	s	METAL 510 0.50% 1/16W
R620	1-218-704-11	s	METAL 3.3K 0.50% 1/16W
R622	1-218-719-11	s	METAL 13K 0.50% 1/16W
R623	1-218-726-11	s	METAL, CHIP 27K 0.50% 1/16W
R624	1-218-696-11	s	METAL, CHIP 1.5K 0.50% 1/16W
R625	1-218-714-11	s	METAL 8.2K 0.50% 1/16W
R626	1-218-684-11	s	CHIP, METAL 470 0.50% 1/16W
R627	1-218-704-11	s	METAL 3.3K 0.50% 1/16W
R628	1-218-712-11	s	METAL 6.8K 0.50% 1/16W
R629	1-218-685-11	s	METAL 510 0.50% 1/16W
R630	1-218-702-11	s	CHIP, METAL 2.7K 0.50% 1/16W
R631	1-218-685-11	s	METAL 510 0.50% 1/16W
R632	1-218-685-11	s	METAL 510 0.50% 1/16W
R633	1-218-724-11	s	METAL 22K 0.50% 1/16W
R634	1-218-698-11	s	METAL 1.8K 0.50% 1/16W
R635	1-218-720-11	s	METAL 15K 0.50% 1/16W
R636	1-218-720-11	s	METAL 15K 0.50% 1/16W
R637	1-216-864-11	s	METAL, CHIP 0 5% 1/16W
R638	1-218-699-11	s	CHIP, METAL 2K 0.50% 1/16W
R639	1-216-864-11	s	METAL, CHIP 0 5% 1/16W
R640	1-218-698-11	s	METAL 1.8K 0.50% 1/16W
R641	1-218-694-11	s	CHIP, METAL 1.2K 0.50% 1/16W
R642	1-218-668-11	s	METAL 100 0.50% 1/16W
R643	1-218-706-11	s	METAL 3.9K 0.50% 1/16W
R644	1-218-692-11	s	CHIP, METAL 1K 0.50% 1/16W
R645	1-218-704-11	s	METAL 3.3K 0.50% 1/16W
R646	1-218-644-11	s	METAL 10 0.50% 1/16W
R647	1-216-857-11	s	METAL, CHIP 1M 5% 1/16W
R648	1-218-702-11	s	CHIP, METAL 2.7K 0.50% 1/16W
R649	1-218-732-11	s	METAL 47K 0.50% 1/16W
R650	1-216-809-11	s	METAL, CHIP 100 5% 1/16W
R651	1-216-809-11	s	METAL, CHIP 100 5% 1/16W
R652	1-218-728-11	s	METAL 33K 0.50% 1/16W
R653	1-218-742-11	s	METAL 120K 0.50% 1/16W
R654	1-218-725-11	s	METAL 24K 0.50% 1/16W
R655	1-218-705-11	s	METAL 3.6K 0.50% 1/16W
R656	1-216-857-11	s	METAL, CHIP 1M 5% 1/16W
R657	1-216-809-11	s	METAL, CHIP 100 5% 1/16W
R658	1-216-845-11	s	METAL, CHIP 100K 5% 1/16W
R659	1-218-736-11	s	METAL 68K 0.50% 1/16W
R660	1-218-710-11	s	CHIP, METAL 5.6K 0.50% 1/16W
R661	1-218-735-11	s	METAL 62K 0.50% 1/16W
R662	1-216-845-11	s	METAL, CHIP 100K 5% 1/16W
R663	1-218-738-11	s	METAL 82K 0.50% 1/16W
R664	1-218-704-11	s	METAL 3.3K 0.50% 1/16W
R665	1-216-833-11	s	METAL, CHIP 10K 5% 1/16W

http://getMANUAL.com

(DM-110 BOARD)

Ref. No. or Q'ty	Part No.	SP	Description
R666	1-216-833-11	s	METAL, CHIP 10K 5% 1/16W
R667	1-216-833-11	s	METAL, CHIP 10K 5% 1/16W
R668	1-216-833-11	s	METAL, CHIP 10K 5% 1/16W
R669	1-218-690-11	s	METAL, CHIP 820 0.50% 1/16W
R670	1-218-750-11	s	METAL 270K 0.50% 1/16W
R671	1-216-856-11	s	METAL, CHIP 820K 5% 1/16W
R672	1-218-729-11	s	METAL 36K 0.50% 1/16W
R674	1-218-742-11	s	METAL 120K 0.50% 1/16W
R701	1-218-711-11	s	METAL 6.2K 0.50% 1/16W
R702	1-218-692-11	s	CHIP, METAL 1K 0.50% 1/16W
R703	1-218-692-11	s	CHIP, METAL 1K 0.50% 1/16W
R704	1-218-702-11	s	CHIP, METAL 2.7K 0.50% 1/16W
R705	1-216-809-11	s	METAL, CHIP 100 5% 1/16W
R706	1-216-809-11	s	METAL, CHIP 100 5% 1/16W
R707	1-218-710-11	s	CHIP, METAL 5.6K 0.50% 1/16W
R708	1-218-724-11	s	METAL 22K 0.50% 1/16W
R709	1-216-809-11	s	METAL, CHIP 100 5% 1/16W
R710	1-218-700-11	s	METAL 2.2K 0.50% 1/16W
R711	1-216-809-11	s	METAL, CHIP 100 5% 1/16W
R712	1-218-704-11	s	METAL 3.3K 0.50% 1/16W
R713	1-218-692-11	s	CHIP, METAL 1K 0.50% 1/16W
R714	1-218-680-11	s	METAL 330 0.50% 1/16W
R715	1-218-685-11	s	METAL 510 0.50% 1/16W
R716	1-218-680-11	s	METAL 330 0.50% 1/16W
R717	1-218-688-11	s	METAL 680 0.50% 1/16W
R718	1-218-688-11	s	METAL 680 0.50% 1/16W
R719	1-218-722-11	s	METAL, CHIP 18K 0.50% 1/16W
R720	1-218-694-11	s	CHIP, METAL 1.2K 0.50% 1/16W
R721	1-218-714-11	s	METAL 8.2K 0.50% 1/16W
R722	1-218-726-11	s	METAL, CHIP 27K 0.50% 1/16W
R723	1-218-704-11	s	METAL 3.3K 0.50% 1/16W
R725	1-218-684-11	s	CHIP, METAL 470 0.50% 1/16W
R726	1-218-702-11	s	CHIP, METAL 2.7K 0.50% 1/16W
R727	1-218-684-11	s	CHIP, METAL 470 0.50% 1/16W
R728	1-218-695-11	s	METAL 1.3K 0.50% 1/16W
R729	1-218-724-11	s	METAL 22K 0.50% 1/16W
R730	1-218-720-11	s	METAL 15K 0.50% 1/16W
R731	1-218-720-11	s	METAL 15K 0.50% 1/16W
R732	1-218-695-11	s	METAL 1.3K 0.50% 1/16W
R733	1-216-864-11	s	METAL, CHIP 0 5% 1/16W
R734	1-216-864-11	s	METAL, CHIP 0 5% 1/16W
R735	1-218-698-11	s	METAL 1.8K 0.50% 1/16W
R736	1-218-694-11	s	CHIP, METAL 1.2K 0.50% 1/16W
R737	1-218-668-11	s	METAL 100 0.50% 1/16W
R738	1-218-706-11	s	METAL 3.9K 0.50% 1/16W
R739	1-218-692-11	s	CHIP, METAL 1K 0.50% 1/16W
R740	1-218-700-11	s	METAL 2.2K 0.50% 1/16W
R741	1-218-644-11	s	METAL 10 0.50% 1/16W
R743	1-218-732-11	s	METAL 47K 0.50% 1/16W
R744	1-216-856-11	s	METAL, CHIP 820K 5% 1/16W
R745	1-218-725-11	s	METAL 24K 0.50% 1/16W
R746	1-216-809-11	s	METAL, CHIP 100 5% 1/16W
R747	1-218-697-11	s	METAL 1.6K 0.50% 1/16W
R748	1-216-809-11	s	METAL, CHIP 100 5% 1/16W
R749	1-216-809-11	s	METAL, CHIP 100 5% 1/16W
R750	1-218-692-11	s	CHIP, METAL 1K 0.50% 1/16W
R751	1-216-833-11	s	METAL, CHIP 10K 5% 1/16W
R752	1-216-857-11	s	METAL, CHIP 1M 5% 1/16W
R753	1-218-710-11	s	CHIP, METAL 5.6K 0.50% 1/16W

(DM-110 BOARD)

Ref. No. or Q'ty	Part No.	SP	Description
R754	1-216-833-11	s	METAL, CHIP 10K 5% 1/16W
R755	1-218-716-11	s	METAL 10K 0.50% 1/16W
R756	1-218-716-11	s	METAL 10K 0.50% 1/16W
R757	1-218-734-11	s	METAL, CHIP 56K 0.50% 1/16W
R758	1-218-692-11	s	CHIP, METAL 1K 0.50% 1/16W
R759	1-218-748-11	s	METAL 220K 0.50% 1/16W
R760	1-218-708-11	s	METAL 4.7K 0.50% 1/16W
R761	1-218-721-11	s	METAL 16K 0.50% 1/16W
R762	1-218-714-11	s	METAL 8.2K 0.50% 1/16W
R763	1-218-722-11	s	METAL, CHIP 18K 0.50% 1/16W
R764	1-216-833-11	s	METAL, CHIP 10K 5% 1/16W
R765	1-218-708-11	s	METAL 4.7K 0.50% 1/16W
R766	1-218-700-11	s	METAL 2.2K 0.50% 1/16W
R767	1-218-684-11	s	CHIP, METAL 470 0.50% 1/16W
R768	1-218-684-11	s	CHIP, METAL 470 0.50% 1/16W
R769	1-218-700-11	s	METAL 2.2K 0.50% 1/16W
R770	1-216-809-11	s	METAL, CHIP 100 5% 1/16W
R771	1-218-708-11	s	METAL 4.7K 0.50% 1/16W
R772	1-218-738-11	s	METAL 82K 0.50% 1/16W
R773	1-218-696-11	s	METAL, CHIP 1.5K 0.50% 1/16W
R774	1-216-833-11	s	METAL, CHIP 10K 5% 1/16W
R775	1-216-833-11	s	METAL, CHIP 10K 5% 1/16W
R776	1-218-692-11	s	CHIP, METAL 1K 0.50% 1/16W
R777	1-218-688-11	s	METAL 680 0.50% 1/16W
R778	1-218-752-11	s	METAL 330K 0.50% 1/16W
R779	1-216-864-11	s	METAL, CHIP 0 5% 1/16W
R780	1-216-856-11	s	METAL, CHIP 820K 5% 1/16W
R781	1-218-736-11	s	METAL 68K 0.50% 1/16W
R801	1-218-711-11	s	METAL 6.2K 0.50% 1/16W
R802	1-218-692-11	s	CHIP, METAL 1K 0.50% 1/16W
R803	1-218-692-11	s	CHIP, METAL 1K 0.50% 1/16W
R804	1-218-702-11	s	CHIP, METAL 2.7K 0.50% 1/16W
R805	1-216-809-11	s	METAL, CHIP 100 5% 1/16W
R806	1-216-809-11	s	METAL, CHIP 100 5% 1/16W
R807	1-218-710-11	s	CHIP, METAL 5.6K 0.50% 1/16W
R808	1-218-724-11	s	METAL 22K 0.50% 1/16W
R809	1-216-809-11	s	METAL, CHIP 100 5% 1/16W
R810	1-218-700-11	s	METAL 2.2K 0.50% 1/16W
R811	1-216-809-11	s	METAL, CHIP 100 5% 1/16W
R812	1-218-704-11	s	METAL 3.3K 0.50% 1/16W
R813	1-218-692-11	s	CHIP, METAL 1K 0.50% 1/16W
R814	1-218-680-11	s	METAL 330 0.50% 1/16W
R815	1-218-692-11	s	CHIP, METAL 1K 0.50% 1/16W
R816	1-216-833-11	s	METAL, CHIP 10K 5% 1/16W
R817	1-218-692-11	s	CHIP, METAL 1K 0.50% 1/16W
R818	1-218-688-11	s	METAL 680 0.50% 1/16W
R819	1-218-688-11	s	METAL 680 0.50% 1/16W
R820	1-218-724-11	s	METAL 22K 0.50% 1/16W
R821	1-218-693-11	s	METAL 1.1K 0.50% 1/16W
R822	1-218-714-11	s	METAL 8.2K 0.50% 1/16W
R823	1-218-726-11	s	METAL, CHIP 27K 0.50% 1/16W
R824	1-218-704-11	s	METAL 3.3K 0.50% 1/16W
R826	1-218-684-11	s	CHIP, METAL 470 0.50% 1/16W
R827	1-218-702-11	s	CHIP, METAL 2.7K 0.50% 1/16W
R828	1-218-684-11	s	CHIP, METAL 470 0.50% 1/16W
R829	1-218-695-11	s	METAL 1.3K 0.50% 1/16W
R830	1-218-724-11	s	METAL 22K 0.50% 1/16W
R831	1-218-720-11	s	METAL 15K 0.50% 1/16W
R832	1-218-720-11	s	METAL 15K 0.50% 1/16W

(DM-110 BOARD)

Ref. No. or Q'ty	Part No.	SP	Description
R833	1-218-694-11	s	CHIP, METAL 1.2K 0.50% 1/16W
R834	1-216-864-11	s	METAL, CHIP 0 5% 1/16W
R835	1-216-864-11	s	METAL, CHIP 0 5% 1/16W
R836	1-218-698-11	s	METAL 1.8K 0.50% 1/16W
R837	1-218-694-11	s	CHIP, METAL 1.2K 0.50% 1/16W
R838	1-218-668-11	s	METAL 100 0.50% 1/16W
R839	1-218-706-11	s	METAL 3.9K 0.50% 1/16W
R840	1-218-692-11	s	CHIP, METAL 1K 0.50% 1/16W
R841	1-218-700-11	s	METAL 2.2K 0.50% 1/16W
R842	1-218-644-11	s	METAL 10 0.50% 1/16W
R844	1-218-732-11	s	METAL 47K 0.50% 1/16W
R845	1-218-724-11	s	METAL 22K 0.50% 1/16W
R846	1-216-809-11	s	METAL, CHIP 100 5% 1/16W
R847	1-218-696-11	s	METAL, CHIP 1.5K 0.50% 1/16W
R848	1-216-809-11	s	METAL, CHIP 100 5% 1/16W
R849	1-216-809-11	s	METAL, CHIP 100 5% 1/16W
R850	1-218-692-11	s	CHIP, METAL 1K 0.50% 1/16W
R851	1-216-833-11	s	METAL, CHIP 10K 5% 1/16W
R852	1-216-857-11	s	METAL, CHIP 1M 5% 1/16W
R853	1-218-710-11	s	CHIP, METAL 5.6K 0.50% 1/16W
R854	1-216-833-11	s	METAL, CHIP 10K 5% 1/16W
R855	1-218-718-11	s	METAL 12K 0.50% 1/16W
R856	1-218-716-11	s	METAL 10K 0.50% 1/16W
R857	1-218-726-11	s	METAL, CHIP 27K 0.50% 1/16W
R858	1-218-692-11	s	CHIP, METAL 1K 0.50% 1/16W
R859	1-218-748-11	s	METAL 220K 0.50% 1/16W
R860	1-218-702-11	s	CHIP, METAL 2.7K 0.50% 1/16W
R861	1-218-713-11	s	METAL, CHIP 7.5K 0.50% 1/16W
R862	1-218-689-11	s	METAL, CHIP 750 0.50% 1/16W
R863	1-218-708-11	s	METAL 4.7K 0.50% 1/16W
R864	1-218-696-11	s	METAL, CHIP 1.5K 0.50% 1/16W
R865	1-216-809-11	s	METAL, CHIP 100 5% 1/16W
R866	1-218-696-11	s	METAL, CHIP 1.5K 0.50% 1/16W
R867	1-218-738-11	s	METAL 82K 0.50% 1/16W
R868	1-216-833-11	s	METAL, CHIP 10K 5% 1/16W
R869	1-216-833-11	s	METAL, CHIP 10K 5% 1/16W
R870	1-218-690-11	s	METAL, CHIP 820 0.50% 1/16W
R871	1-218-752-11	s	METAL 330K 0.50% 1/16W
R872	1-216-864-11	s	METAL, CHIP 0 5% 1/16W
R873	1-216-856-11	s	METAL, CHIP 820K 5% 1/16W
R874	1-218-746-11	s	METAL 180K 0.50% 1/16W
R901	1-218-692-11	s	CHIP, METAL 1K 0.50% 1/16W
R902	1-216-833-11	s	METAL, CHIP 10K 5% 1/16W
R903	1-218-714-11	s	METAL 8.2K 0.50% 1/16W
R904	1-218-728-11	s	METAL 33K 0.50% 1/16W
R905	1-216-809-11	s	METAL, CHIP 100 5% 1/16W
R906	1-216-833-11	s	METAL, CHIP 10K 5% 1/16W
R907	1-216-809-11	s	METAL, CHIP 100 5% 1/16W
R908	1-218-692-11	s	CHIP, METAL 1K 0.50% 1/16W
R909	1-216-833-11	s	METAL, CHIP 10K 5% 1/16W
R910	1-218-714-11	s	METAL 8.2K 0.50% 1/16W
R911	1-218-728-11	s	METAL 33K 0.50% 1/16W
R912	1-216-833-11	s	METAL, CHIP 10K 5% 1/16W
R913	1-218-692-11	s	CHIP, METAL 1K 0.50% 1/16W
R914	1-216-833-11	s	METAL, CHIP 10K 5% 1/16W
R915	1-218-714-11	s	METAL 8.2K 0.50% 1/16W
R916	1-218-728-11	s	METAL 33K 0.50% 1/16W
R917	1-216-809-11	s	METAL, CHIP 100 5% 1/16W
R918	1-216-833-11	s	METAL, CHIP 10K 5% 1/16W

(DM-110 BOARD)

Ref. No. or Q'ty	Part No.	SP	Description
R919	1-216-833-11	s	METAL, CHIP 10K 5% 1/16W
R920	1-218-726-11	s	METAL, CHIP 27K 0.50% 1/16W
R921	1-218-698-11	s	METAL 1.8K 0.50% 1/16W
R922	1-218-720-11	s	METAL 15K 0.50% 1/16W
R923	1-216-809-11	s	METAL, CHIP 100 5% 1/16W
R924	1-218-720-11	s	METAL 15K 0.50% 1/16W
R925	1-218-708-11	s	METAL 4.7K 0.50% 1/16W
R926	1-216-809-11	s	METAL, CHIP 100 5% 1/16W
R927	1-218-710-11	s	CHIP, METAL 5.6K 0.50% 1/16W
R928	1-216-845-11	s	METAL, CHIP 100K 5% 1/16W
R929	1-218-710-11	s	CHIP, METAL 5.6K 0.50% 1/16W
R930	1-218-738-11	s	METAL 82K 0.50% 1/16W
R931	1-218-730-11	s	CHIP, METAL 39K 0.50% 1/16W
R932	1-218-708-11	s	METAL 4.7K 0.50% 1/16W
R933	1-218-730-11	s	CHIP, METAL 39K 0.50% 1/16W
R934	1-218-718-11	s	METAL 12K 0.50% 1/16W
R935	1-216-833-11	s	METAL, CHIP 10K 5% 1/16W
R936	1-216-833-11	s	METAL, CHIP 10K 5% 1/16W
R937	1-216-809-11	s	METAL, CHIP 100 5% 1/16W
R939	1-218-692-11	s	CHIP, METAL 1K 0.50% 1/16W
R940	1-218-710-11	s	CHIP, METAL 5.6K 0.50% 1/16W
R941	1-218-692-11	s	CHIP, METAL 1K 0.50% 1/16W
R942	1-218-716-11	s	METAL 10K 0.50% 1/16W
R943	1-218-693-11	s	METAL 1.1K 0.50% 1/16W
R944	1-218-690-11	s	METAL, CHIP 820 0.50% 1/16W
R945	1-218-720-11	s	METAL 15K 0.50% 1/16W
R946	1-218-700-11	s	METAL 2.2K 0.50% 1/16W
R947	1-218-698-11	s	METAL 1.8K 0.50% 1/16W
R948	1-218-719-11	s	METAL 13K 0.50% 1/16W
R949	1-218-690-11	s	METAL, CHIP 820 0.50% 1/16W
R950	1-218-696-11	s	METAL, CHIP 1.5K 0.50% 1/16W
R951	1-218-658-11	s	METAL 39 0.50% 1/16W
R952	1-218-723-11	s	METAL 20K 0.50% 1/16W
R953	1-218-726-11	s	METAL, CHIP 27K 0.50% 1/16W
R954	1-218-690-11	s	METAL, CHIP 820 0.50% 1/16W
R955	1-218-660-91	s	METAL 47 0.50% 1/16W
R956	1-218-680-11	s	METAL 330 0.50% 1/16W
R957	1-218-688-11	s	METAL 680 0.50% 1/16W
R958	1-218-696-11	s	METAL, CHIP 1.5K 0.50% 1/16W
R959	1-218-684-11	s	CHIP, METAL 470 0.50% 1/16W
R960	1-218-692-11	s	CHIP, METAL 1K 0.50% 1/16W
R961	1-218-650-11	s	METAL, CHIP 18 0.50% 1/16
R962	1-216-833-11	s	METAL, CHIP 10K 5% 1/16W
R963	1-216-833-11	s	METAL, CHIP 10K 5% 1/16W
R964	1-216-857-11	s	METAL, CHIP 1M 5% 1/16W
R965	1-218-660-91	s	METAL 47 0.50% 1/16W
R966	1-218-688-11	s	METAL 680 0.50% 1/16W
R967	1-218-696-11	s	METAL, CHIP 1.5K 0.50% 1/16W
R968	1-218-674-11	s	METAL 180 0.50% 1/16W
R969	1-218-694-11	s	CHIP, METAL 1.2K 0.50% 1/16W
R970	1-218-685-11	s	METAL 510 0.50% 1/16W
R971	1-218-686-11	s	METAL 560 0.50% 1/16W
R972	1-216-809-11	s	METAL, CHIP 100 5% 1/16W
R973	1-216-793-11	s	METAL 4.7 5% 1/16W
R974	1-216-793-11	s	METAL 4.7 5% 1/16W
R975	1-218-664-11	s	METAL 68 0.50% 1/16W
R976	1-218-710-11	s	CHIP, METAL 5.6K 0.50% 1/16W
R977	1-216-809-11	s	METAL, CHIP 100 5% 1/16W
R978	1-218-724-11	s	METAL 22K 0.50% 1/16W

(DM-110 BOARD)

Ref. No. or Q'ty	Part No.	SP	Description
R979	1-216-833-11	s	METAL, CHIP 10K 5% 1/16W
R980	1-216-833-11	s	METAL, CHIP 10K 5% 1/16W
R981	1-218-664-11	s	METAL 68 0.50% 1/16W
R982	1-216-857-11	s	METAL, CHIP 1M 5% 1/16W
R1001	1-216-833-11	s	METAL, CHIP 10K 5% 1/16W
R1002	1-216-809-11	s	METAL, CHIP 100 5% 1/16W
R1003	1-218-710-11	s	CHIP, METAL 5.6K 0.50% 1/16W
R1004	1-216-845-11	s	METAL, CHIP 100K 5% 1/16W
R1005	1-218-710-11	s	CHIP, METAL 5.6K 0.50% 1/16W
R1006	1-218-738-11	s	METAL 82K 0.50% 1/16W
R1007	1-218-730-11	s	CHIP, METAL 39K 0.50% 1/16W
R1008	1-218-708-11	s	METAL 4.7K 0.50% 1/16W
R1009	1-218-730-11	s	CHIP, METAL 39K 0.50% 1/16W
R1010	1-218-718-11	s	METAL 12K 0.50% 1/16W
R1011	1-216-833-11	s	METAL, CHIP 10K 5% 1/16W
R1012	1-216-833-11	s	METAL, CHIP 10K 5% 1/16W
R1013	1-218-724-11	s	METAL 22K 0.50% 1/16W
R1014	1-218-720-11	s	METAL 15K 0.50% 1/16W
R1015	1-218-724-11	s	METAL 22K 0.50% 1/16W
R1016	1-218-700-11	s	METAL 2.2K 0.50% 1/16W
R1017	1-216-809-11	s	METAL, CHIP 100 5% 1/16W
R1019	1-218-708-11	s	METAL 4.7K 0.50% 1/16W
R1021	1-218-692-11	s	CHIP, METAL 1K 0.50% 1/16W
R1022	1-218-710-11	s	CHIP, METAL 5.6K 0.50% 1/16W
R1023	1-218-692-11	s	CHIP, METAL 1K 0.50% 1/16W
R1024	1-218-714-11	s	METAL 8.2K 0.50% 1/16W
R1025	1-218-744-11	s	METAL 150K 0.50% 1/16W
R1026	1-218-749-11	s	METAL 240K 0.50% 1/16W
R1027	1-218-701-11	s	METAL 2.4K 0.50% 1/16W
R1030	1-218-676-11	s	METAL 220 0.50% 1/16W
R1032	1-218-708-11	s	METAL 4.7K 0.50% 1/16W
R1033	1-218-692-11	s	CHIP, METAL 1K 0.50% 1/16W
R1034	1-218-690-11	s	METAL, CHIP 820 0.50% 1/16W
R1035	1-218-654-11	s	METAL, CHIP 27 0.50% 1/16W
R1037	1-218-700-11	s	METAL 2.2K 0.50% 1/16W
R1038	1-216-833-11	s	METAL, CHIP 10K 5% 1/16W
R1045	1-216-857-11	s	METAL, CHIP 1M 5% 1/16W
R1046	1-218-682-11	s	METAL 390 0.50% 1/16W
R1047	1-218-708-11	s	METAL 4.7K 0.50% 1/16W
R1048	1-218-692-11	s	CHIP, METAL 1K 0.50% 1/16W
R1049	1-218-730-11	s	CHIP, METAL 39K 0.50% 1/16W
R1050	1-218-665-11	s	METAL, CHIP 75 0.50% 1/16W
R1051	1-216-845-11	s	METAL, CHIP 100K 5% 1/16W
R1052	1-216-809-11	s	METAL, CHIP 100 5% 1/16W
RV101	1-237-032-11	s	RES, ADJ, METAL 500
RV301	1-237-034-11	s	RES, ADJ, METAL 2K
RV401	1-237-034-11	s	RES, ADJ, METAL 2K
RV402	1-237-038-11	s	RES, ADJ, METAL 50K
RV403	1-237-035-11	s	RES, ADJ, METAL 5K
RV404	1-237-034-11	s	RES, ADJ, METAL 2K
RV501	1-237-035-11	s	RES, ADJ, METAL 5K
RV502	1-237-037-11	s	RES, ADJ, METAL 20K
RV503	1-237-036-11	s	RES, ADJ, METAL 10K
RV601	1-237-034-11	s	RES, ADJ, METAL 2K
RV602	1-241-261-41	s	RES, ADJ, METAL 1K
RV701	1-237-034-11	s	RES, ADJ, METAL 2K
RV702	1-241-260-11	s	RES, ADJ, METALT 500
RV703	1-237-035-11	s	RES, ADJ, METAL 5K
RV704	1-237-037-11	s	RES, ADJ, METAL 20K

(DM-110 BOARD)

Ref. No. or Q'ty	Part No.	SP	Description
RV705	1-237-036-11	s	RES, ADJ, METAL 10K
RV801	1-237-034-11	s	RES, ADJ, METAL 2K
RV802	1-241-260-11	s	RES, ADJ, METALT 500
RV803	1-237-035-11	s	RES, ADJ, METAL 5K
RV901	1-237-032-11	s	RES, ADJ, METAL 500
RV1001	1-237-043-41	s	RES, ADJ METAL 2M
S101	1-571-304-11	s	SWITCH, CHIP
S201	1-570-711-11	s	SWITCH, SLIDE
S202	1-572-328-11	s	SWITCH, CHIP
S301	1-571-304-11	s	SWITCH, CHIP
S1001	1-570-711-11	s	SWITCH, SLIDE
SWF100	1-404-706-11	s	RESONATOR, SAW

IO-136 BOARD

Ref. No. or Q'ty	Part No.	SP	Description
1pc	A-8277-385-A	o	MOUNTED CIRCUIT BOARD, IO-136
1pc	1-562-286-11	o	HOUSING, 5P
1pc	3-671-893-00	s	CLAMP (LOW TYPE)
C1	1-113-925-11	s	ELECT 0.01uF 20% 250V
C2	1-113-925-11	s	ELECT 0.01uF 20% 250V
C3	1-106-375-12	s	MYLAR 0.022uF 10% 100
C4	1-106-375-12	s	MYLAR 0.022uF 10% 100
C5	1-136-191-11	s	FILM 0.22uF 10% 250V
CN1	1-564-687-11	o	PIN, CONNECTOR 3P
CN2	1-750-880-11	s	RECEPTACLE, COAXIAL CONNECTOR, BNC
L1	1-410-151-11	s	INDUCTOR 56uH
L2	1-408-142-21	s	INDUCTOR MICRO 22.5mH
L3	1-402-971-11	s	COIL, CHOKE 100UH
L4	1-402-971-11	s	COIL, CHOKE 100UH
L5	1-402-971-11	s	COIL, CHOKE 100UH
L6	1-402-971-11	s	COIL, CHOKE 100UH
L7	1-402-971-11	s	COIL, CHOKE 100UH

MB-688 BOARD

Ref. No. or Q'ty	Part No.	SP	Description
1pc	A-8277-384-A	o	MOUNTED CIRCUIT BOARD, MB-688
15pcs	3-719-381-11	s	SCREW (M2X5)
CN6	1-750-880-11	s	RECEPTACLE, COAXIAL CONNECTOR, BNC
CN7	1-750-880-11	s	RECEPTACLE, COAXIAL CONNECTOR, BNC
CN8	1-750-933-21	o	PIN, CONNECTOR 12P
CN9	1-750-933-21	o	PIN, CONNECTOR 12P
CN10	1-766-705-31	o	CONNECTOR, FPC/FFC 25P
CN11	1-750-935-21	o	PIN, CONNECTOR 30P
CN12	1-569-119-21	s	CONNECTOR, FPC (ZIF(I)TYPE)16P
CN13	1-569-117-11	s	CONNECTOR, FPC/FFC 8P
CN14	1-750-935-21	o	PIN, CONNECTOR 30P
CN15	1-750-361-21	s	CONNECTOR, FFC/FPC (ZIF) 30P
CN16	1-750-933-21	o	PIN, CONNECTOR 12P

VA-175A/175B/175P BOARD

Ref. No. or Q'ty	Part No.	SP	Description
1pc	A-8277-399-A	o	MOUNTED CIRCUIT BOARD, VA-175B [for CCU-550(J)]
1pc	A-8277-378-A	o	MOUNTED CIRCUIT BOARD, VA-175A [for CCU-550(UC)]
1pc	A-8277-403-A	o	MOUNTED CIRCUIT BOARD, VA-175P [for CCU-550P(CE)]
1pc	3-697-756-03	o	PANEL,VA
1pc	2-251-622-01	o	LEVER, PC BOARD
4pcs	7-682-903-01	s	SCREW +PWH 3X5
3pcs	3-719-381-11	s	SCREW (M2X5)
2pcs	3-722-486-21	s	KNOB
2pcs	7-621-731-08	s	SET-SCT,HEX. 2X2.5,FLAT POINT
1pc	3-697-870-02	o	INSULATER,BOARD
C1	1-135-164-21	s	TANTALUM, CHIP 22uF 20% 10V
C2	1-135-164-21	s	TANTALUM, CHIP 22uF 20% 10V
C3	1-126-391-11	s	ELECT 47uF 20% 6.3V
C4	1-126-391-11	s	ELECT 47uF 20% 6.3V
C5	1-104-913-11	s	TANTALUM, CHIP 10uF 20% 16V
C6	1-104-913-11	s	TANTALUM, CHIP 10uF 20% 16V
C7	1-164-156-11	s	CERAMIC 0.1uF 25V
C9	1-104-852-11	s	TANTALUM, CHIP 22uF 20% 10V
C12	1-104-911-11	s	TANTALUM, CHIP 33uF 20% 10V
C13	1-104-911-11	s	TANTALUM, CHIP 33uF 20% 10V
C14	1-164-156-11	s	CERAMIC 0.1uF 25V
C15	1-164-156-11	s	CERAMIC 0.1uF 25V
C16	1-126-396-11	s	ELECT, CHIP 47uF 20% 16V
C17	1-126-396-11	s	ELECT, CHIP 47uF 20% 16V
C18	1-164-156-11	s	CERAMIC 0.1uF 25V
C19	1-164-156-11	s	CERAMIC 0.1uF 25V
C101	1-126-391-11	s	ELECT 47uF 20% 6.3V
C102	1-126-391-11	s	ELECT 47uF 20% 6.3V
C103	1-164-156-11	s	CERAMIC 0.1uF 25V
C104	1-164-156-11	s	CERAMIC 0.1uF 25V
C105	1-164-156-11	s	CERAMIC 0.1uF 25V
C106	1-135-091-00	s	TANTALUM, CHIP 1uF 20% 16V
C107	1-164-156-11	s	CERAMIC 0.1uF 25V
C108	1-135-091-00	s	TANTALUM, CHIP 1uF 20% 16V
C110	1-126-391-11	s	ELECT 47uF 20% 6.3V
C111	1-164-156-11	s	CERAMIC 0.1uF 25V
C112	1-164-156-11	s	CERAMIC 0.1uF 25V
C113	1-162-917-11	s	CERAMIC, CHIP 15PF 5% 50V
C201	1-126-391-11	s	ELECT 47uF 20% 6.3V
C202	1-126-391-11	s	ELECT 47uF 20% 6.3V
C203	1-164-156-11	s	CERAMIC 0.1uF 25V
C204	1-164-156-11	s	CERAMIC 0.1uF 25V
C205	1-164-156-11	s	CERAMIC 0.1uF 25V
C206	1-164-156-11	s	CERAMIC 0.1uF 25V
C207	1-104-851-11	s	TANTALUM, CHIP 10uF 20% 10V
C208	1-164-156-11	s	CERAMIC 0.1uF 25V
C209	1-104-851-11	s	TANTALUM, CHIP 10uF 20% 10V
C211	1-126-391-11	s	ELECT 47uF 20% 6.3V
C212	1-164-156-11	s	CERAMIC 0.1uF 25V
C213	1-126-391-11	s	ELECT 47uF 20% 6.3V
C214	1-164-156-11	s	CERAMIC 0.1uF 25V
C215	1-104-851-11	s	TANTALUM, CHIP 10uF 20% 10V
C216	1-164-156-11	s	CERAMIC 0.1uF 25V
C217	1-164-156-11	s	CERAMIC 0.1uF 25V
C219	1-162-970-11	s	CERAMIC, CHIP 0.01uF 10% 25V
C220	1-104-851-11	s	TANTALUM, CHIP 10uF 20% 10V

(VA-175A/175B/175P BOARD)

Ref. No. or Q'ty	Part No.	SP	Description
C221	1-104-851-11	s	TANTALUM, CHIP 10uF 20% 10V
C222	1-104-851-11	s	TANTALUM, CHIP 10uF 20% 10V
C223	1-162-970-11	s	CERAMIC, CHIP 0.01uF 10% 25V
C224	1-135-070-00	s	TANTALUM, CHIP 0.1uF 10% 35V
C225	1-135-070-00	s	TANTALUM, CHIP 0.1uF 10% 35V
C301	1-126-391-11	s	ELECT 47uF 20% 6.3V
C302	1-126-391-11	s	ELECT 47uF 20% 6.3V
C303	1-164-156-11	s	CERAMIC 0.1uF 25V
C304	1-164-156-11	s	CERAMIC 0.1uF 25V
C305	1-164-156-11	s	CERAMIC 0.1uF 25V
C306	1-164-156-11	s	CERAMIC 0.1uF 25V
C307	1-104-851-11	s	TANTALUM, CHIP 10uF 20% 10V
C308	1-164-156-11	s	CERAMIC 0.1uF 25V
C309	1-104-851-11	s	TANTALUM, CHIP 10uF 20% 10V
C311	1-126-391-11	s	ELECT 47uF 20% 6.3V
C312	1-164-156-11	s	CERAMIC 0.1uF 25V
C313	1-126-391-11	s	ELECT 47uF 20% 6.3V
C314	1-164-156-11	s	CERAMIC 0.1uF 25V
C315	1-104-851-11	s	TANTALUM, CHIP 10uF 20% 10V
C316	1-164-156-11	s	CERAMIC 0.1uF 25V
C317	1-164-156-11	s	CERAMIC 0.1uF 25V
C319	1-162-970-11	s	CERAMIC, CHIP 0.01uF 10% 25V
C320	1-104-851-11	s	TANTALUM, CHIP 10uF 20% 10V
C321	1-104-851-11	s	TANTALUM, CHIP 10uF 20% 10V
C322	1-104-851-11	s	TANTALUM, CHIP 10uF 20% 10V
C323	1-162-970-11	s	CERAMIC, CHIP 0.01uF 10% 25V
C324	1-135-070-00	s	TANTALUM, CHIP 0.1uF 10% 35V
C325	1-135-070-00	s	TANTALUM, CHIP 0.1uF 10% 35V
C401	1-164-156-11	s	CERAMIC 0.1uF 25V
C403	1-104-851-11	s	TANTALUM, CHIP 10uF 20% 10V
C405	1-164-156-11	s	CERAMIC 0.1uF 25V
C406	1-164-156-11	s	CERAMIC 0.1uF 25V
C407	1-126-391-11	s	ELECT 47uF 20% 6.3V
C408	1-126-391-11	s	ELECT 47uF 20% 6.3V
C409	1-104-851-11	s	TANTALUM, CHIP 10uF 20% 10V
C410	1-104-851-11	s	TANTALUM, CHIP 10uF 20% 10V
C411	1-164-156-11	s	CERAMIC 0.1uF 25V
C413	1-162-908-11	s	CERAMIC 3PF 0.25PF 50V
C414	1-162-927-11	s	CERAMIC, CHIP 100PF 5% 50V
C415	1-164-156-11	s	CERAMIC 0.1uF 25V
C416	1-164-156-11	s	CERAMIC 0.1uF 25V
C417	1-126-391-11	s	ELECT 47uF 20% 6.3V
C418	1-126-391-11	s	ELECT 47uF 20% 6.3V
C502	1-104-851-11	s	TANTALUM, CHIP 10uF 20% 10V
C504	1-164-156-11	s	CERAMIC 0.1uF 25V
C505	1-164-156-11	s	CERAMIC 0.1uF 25V
C506	1-126-391-11	s	ELECT 47uF 20% 6.3V
C507	1-126-391-11	s	ELECT 47uF 20% 6.3V
C508	1-104-851-11	s	TANTALUM, CHIP 10uF 20% 10V
C509	1-104-851-11	s	TANTALUM, CHIP 10uF 20% 10V
C510	1-164-156-11	s	CERAMIC 0.1uF 25V
C512	1-162-911-11	s	CERAMIC, CHIP 6PF 50V
C513	1-162-927-11	s	CERAMIC, CHIP 100PF 5% 50V
C514	1-164-156-11	s	CERAMIC 0.1uF 25V
C515	1-164-156-11	s	CERAMIC 0.1uF 25V
C516	1-126-391-11	s	ELECT 47uF 20% 6.3V
C517	1-126-391-11	s	ELECT 47uF 20% 6.3V
C602	1-104-851-11	s	TANTALUM, CHIP 10uF 20% 10V
C604	1-164-156-11	s	CERAMIC 0.1uF 25V

(VA-175A/175B/175P BOARD)

Ref. No. or Q'ty	Part No.	SP	Description
C605	1-164-156-11	s	CERAMIC 0.1uF 25V
C606	1-126-391-11	s	ELECT 47uF 20% 6.3V
C607	1-126-391-11	s	ELECT 47uF 20% 6.3V
C608	1-104-851-11	s	TANTALUM, CHIP 10uF 20% 10V
C609	1-104-851-11	s	TANTALUM, CHIP 10uF 20% 10V
C610	1-164-156-11	s	CERAMIC 0.1uF 25V
C611	1-162-959-11	s	CERAMIC 330PF 5% 50V
C612	1-164-315-11	s	CERAMIC 470PF 5% 50V
C613	1-162-926-11	s	CERAMIC, CHIP 82PF 5% 50V
C615	1-162-911-11	s	CERAMIC, CHIP 6PF 50V
C616	1-162-927-11	s	CERAMIC, CHIP 100PF 5% 50V
C617	1-164-156-11	s	CERAMIC 0.1uF 25V
C618	1-164-156-11	s	CERAMIC 0.1uF 25V
C619	1-126-391-11	s	ELECT 47uF 20% 6.3V
C620	1-126-391-11	s	ELECT 47uF 20% 6.3V
C701	1-126-391-11	s	ELECT 47uF 20% 6.3V
C702	1-164-156-11	s	CERAMIC 0.1uF 25V
C703	1-164-156-11	s	CERAMIC 0.1uF 25V
C704	1-126-391-11	s	ELECT 47uF 20% 6.3V
C705	1-162-927-11	s	CERAMIC, CHIP 100PF 5% 50V
C706	1-162-927-11	s	CERAMIC, CHIP 100PF 5% 50V
C707	1-162-927-11	s	CERAMIC, CHIP 100PF 5% 50V
C708	1-162-927-11	s	CERAMIC, CHIP 100PF 5% 50V
C710	1-162-907-11	s	CERAMIC, CHIP 2PF 50V
C711	1-126-391-11	s	ELECT 47uF 20% 6.3V
C712	1-126-391-11	s	ELECT 47uF 20% 6.3V
C713	1-164-156-11	s	CERAMIC 0.1uF 25V
C714	1-164-156-11	s	CERAMIC 0.1uF 25V
C715	1-162-927-11	s	CERAMIC, CHIP 100PF 5% 50V
C801	1-126-391-11	s	ELECT 47uF 20% 6.3V
C802	1-164-156-11	s	CERAMIC 0.1uF 25V
C803	1-164-156-11	s	CERAMIC 0.1uF 25V
C804	1-126-391-11	s	ELECT 47uF 20% 6.3V
C806	1-164-156-11	s	CERAMIC 0.1uF 25V
C807	1-164-156-11	s	CERAMIC 0.1uF 25V
C808	1-162-921-11	s	CERAMIC, CHIP 33PF 5% 50V [for CCU-550(J), CCU-550(UC)]
C809	1-162-957-11	s	CERAMIC 220PF 5% 50V [for CCU-550(J), CCU-550(UC)]
C811	1-162-909-11	s	CERAMIC 4PF 0.25PF 50V [for CCU-550P(CE)]
C812	1-162-914-11	s	CERAMIC 9PF 0.5PF 50V
C814	1-126-391-11	s	ELECT 47uF 20% 6.3V
C815	1-126-391-11	s	ELECT 47uF 20% 6.3V
C816	1-164-156-11	s	CERAMIC 0.1uF 25V
C817	1-164-156-11	s	CERAMIC 0.1uF 25V
C818	1-162-927-11	s	CERAMIC, CHIP 100PF 5% 50V
C819	1-162-917-11	s	CERAMIC, CHIP 15PF 5% 50V
C901	1-162-959-11	s	CERAMIC 330PF 5% 50V
C902	1-164-156-11	s	CERAMIC 0.1uF 25V
C903	1-164-156-11	s	CERAMIC 0.1uF 25V
C904	1-126-396-11	s	ELECT, CHIP 47uF 20% 16V
C905	1-126-396-11	s	ELECT, CHIP 47uF 20% 16V
C906	1-164-156-11	s	CERAMIC 0.1uF 25V
C907	1-164-156-11	s	CERAMIC 0.1uF 25V
C909	1-164-156-11	s	CERAMIC 0.1uF 25V
C910	1-126-391-11	s	ELECT 47uF 20% 6.3V
C911	1-126-391-11	s	ELECT 47uF 20% 6.3V
C912	1-164-156-11	s	CERAMIC 0.1uF 25V

(VA-175A/175B/175P BOARD)

Ref. No. or Q'ty	Part No.	SP	Description
C913	1-164-156-11	s	CERAMIC 0.1uF 25V
C914	1-164-156-11	s	CERAMIC 0.1uF 25V
C1001	1-126-391-11	s	ELECT 47uF 20% 6.3V
C1002	1-126-391-11	s	ELECT 47uF 20% 6.3V
C1003	1-162-924-11	s	CERAMIC 56PF 5% 50V
C1004	1-162-957-11	s	CERAMIC 220PF 5% 50V
C1005	1-162-919-11	s	CERAMIC, CHIP 22PF 5% 50V
C1006	1-162-928-11	s	CERAMIC 120PF 5% 50V
C1008	1-162-915-11	s	CERAMIC, CHIP 10PF 5PF 50V
C1009	1-164-156-11	s	CERAMIC 0.1uF 25V
C1010	1-164-156-11	s	CERAMIC 0.1uF 25V
C1011	1-162-919-11	s	CERAMIC, CHIP 22PF 5% 50V
C1012	1-162-923-11	s	CERAMIC, CHIP 47PF 5% 50V
C1013	1-162-928-11	s	CERAMIC 120PF 5% 50V
C1101	1-126-391-11	s	ELECT 47uF 20% 6.3V
C1102	1-126-391-11	s	ELECT 47uF 20% 6.3V
C1103	1-104-851-11	s	TANTALUM, CHIP 10uF 20% 10V
C1104	1-162-919-11	s	CERAMIC, CHIP 22PF 5% 50V
C1105	1-104-851-11	s	TANTALUM, CHIP 10uF 20% 10V
C1106	1-104-851-11	s	TANTALUM, CHIP 10uF 20% 10V
C1107	1-104-852-11	s	TANTALUM, CHIP 22uF 20% 10V
C1108	1-164-156-11	s	CERAMIC 0.1uF 25V
C1109	1-164-156-11	s	CERAMIC 0.1uF 25V
C1110	1-104-851-11	s	TANTALUM, CHIP 10uF 20% 10V
C1111	1-162-923-11	s	CERAMIC, CHIP 47PF 5% 50V
C1112	1-104-851-11	s	TANTALUM, CHIP 10uF 20% 10V
C1113	1-104-851-11	s	TANTALUM, CHIP 10uF 20% 10V
C1115	1-164-156-11	s	CERAMIC 0.1uF 25V
C1116	1-164-156-11	s	CERAMIC 0.1uF 25V
C1117	1-104-851-11	s	TANTALUM, CHIP 10uF 20% 10V
C1118	1-104-851-11	s	TANTALUM, CHIP 10uF 20% 10V
C1119	1-104-847-11	s	TANTALUM, CHIP 22uF 20% 4V
C1120	1-104-847-11	s	TANTALUM, CHIP 22uF 20% 4V
C1121	1-104-847-11	s	TANTALUM, CHIP 22uF 20% 4V
C1122	1-104-847-11	s	TANTALUM, CHIP 22uF 20% 4V
C1123	1-126-396-11	s	ELECT, CHIP 47uF 20% 16V
C1124	1-164-156-11	s	CERAMIC 0.1uF 25V
C1125	1-104-851-11	s	TANTALUM, CHIP 10uF 20% 10V [for CCU-550P(CE)]
C1126	1-162-928-11	s	CERAMIC 120PF 5% 50V
C1127	1-164-156-11	s	CERAMIC 0.1uF 25V
C1128	1-164-156-11	s	CERAMIC 0.1uF 25V
C1129	1-162-919-11	s	CERAMIC, CHIP 22PF 5% 50V
C1130	1-104-851-11	s	TANTALUM, CHIP 10uF 20% 10V
C1131	1-104-851-11	s	TANTALUM, CHIP 10uF 20% 10V
C1132	1-164-156-11	s	CERAMIC 0.1uF 25V
C1133	1-164-156-11	s	CERAMIC 0.1uF 25V
C1134	1-164-156-11	s	CERAMIC 0.1uF 25V
C1135	1-164-156-11	s	CERAMIC 0.1uF 25V
C1136	1-164-156-11	s	CERAMIC 0.1uF 25V
C1137	1-162-918-11	s	CERAMIC, CHIP 18PF 5% 50V
C1138	1-164-156-11	s	CERAMIC 0.1uF 25V
C1201	1-126-391-11	s	ELECT 47uF 20% 6.3V
C1202	1-126-391-11	s	ELECT 47uF 20% 6.3V
C1203	1-164-156-11	s	CERAMIC 0.1uF 25V
C1204	1-164-156-11	s	CERAMIC 0.1uF 25V
C1205	1-162-915-11	s	CERAMIC, CHIP 10PF 5PF 50V [for CCU-550(J), CCU-550(UC)]
C1205	1-162-909-11	s	CERAMIC 4PF 0.25PF 50V [for CCU-550P(CE)]

(VA-175A/175B/175P BOARD)

Ref. No. or Q'ty	Part No.	SP	Description
C1209	1-162-927-11	s	CERAMIC, CHIP 100PF 5% 50V
C1210	1-164-156-11	s	CERAMIC 0.1uF 25V
C1211	1-164-156-11	s	CERAMIC 0.1uF 25V
C1212	1-126-391-11	s	ELECT 47uF 20% 6.3V
C1213	1-126-391-11	s	ELECT 47uF 20% 6.3V
C1214	1-164-156-11	s	CERAMIC 0.1uF 25V
C1215	1-162-907-11	s	CERAMIC, CHIP 2PF 50V
C1216	1-104-851-11	s	TANTALUM, CHIP 10uF 20% 10V
C1217	1-162-909-11	s	CERAMIC 4PF 0.25PF 50V
C1218	1-164-156-11	s	CERAMIC 0.1uF 25V
C1219	1-164-156-11	s	CERAMIC 0.1uF 25V
C1220	1-126-391-11	s	ELECT 47uF 20% 6.3V
C1221	1-126-391-11	s	ELECT 47uF 20% 6.3V
C1223	1-162-910-11	s	CERAMIC 5PF 0.25PF 50V
C1224	1-162-927-11	s	CERAMIC, CHIP 100PF 5% 50V
C1226	1-164-156-11	s	CERAMIC 0.1uF 25V
C1227	1-164-156-11	s	CERAMIC 0.1uF 25V
C1230	1-162-927-11	s	CERAMIC, CHIP 100PF 5% 50V
C1232	1-164-156-11	s	CERAMIC 0.1uF 25V
C1233	1-164-156-11	s	CERAMIC 0.1uF 25V
C1301	1-126-391-11	s	ELECT 47uF 20% 6.3V
C1302	1-126-391-11	s	ELECT 47uF 20% 6.3V
C1303	1-164-156-11	s	CERAMIC 0.1uF 25V
C1304	1-164-156-11	s	CERAMIC 0.1uF 25V
C1305	1-126-391-11	s	ELECT 47uF 20% 6.3V
C1306	1-162-964-11	s	CERAMIC 0.001uF 10% 50V
C1307	1-164-227-11	s	CERAMIC 0.022uF 10% 25V
C1308	1-104-851-11	s	TANTALUM, CHIP 10uF 20% 10V
C1309	1-135-145-11	s	TANTALUM, CHIP 0.47uF 10% 35V
C1310	1-162-915-11	s	CERAMIC, CHIP 10PF 5PF 50V
C1311	1-164-156-11	s	CERAMIC 0.1uF 25V
C1312	1-164-156-11	s	CERAMIC 0.1uF 25V
C1313	1-162-925-11	s	CERAMIC, CHIP 68PF 5% 50V
C1314	1-164-156-11	s	CERAMIC 0.1uF 25V
C1315	1-104-851-11	s	TANTALUM, CHIP 10uF 20% 10V
C1316	1-164-156-11	s	CERAMIC 0.1uF 25V
C1317	1-164-156-11	s	CERAMIC 0.1uF 25V
C1318	1-162-925-11	s	CERAMIC, CHIP 68PF 5% 50V [for CCU-550(J), CCU-550(UC)]
C1318	1-162-923-11	s	CERAMIC, CHIP 47PF 5% 50V [for CCU-550P(CE)]
C1319	1-162-964-11	s	CERAMIC 0.001uF 10% 50V
C1320	1-164-156-11	s	CERAMIC 0.1uF 25V
C1321	1-104-852-11	s	TANTALUM, CHIP 22uF 20% 10V
C1401	1-126-391-11	s	ELECT 47uF 20% 6.3V
C1402	1-126-391-11	s	ELECT 47uF 20% 6.3V
C1403	1-164-156-11	s	CERAMIC 0.1uF 25V
C1404	1-164-156-11	s	CERAMIC 0.1uF 25V
C1405	1-162-969-11	s	CERAMIC 0.0068uF 10% 25V
C1406	1-163-137-00	s	CERAMIC, CHIP 680PF 5% 50V
C1407	1-164-156-11	s	CERAMIC 0.1uF 25V
C1408	1-126-391-11	s	ELECT 47uF 20% 6.3V
C1409	1-126-391-11	s	ELECT 47uF 20% 6.3V
C1410	1-164-156-11	s	CERAMIC 0.1uF 25V
C1411	1-162-923-11	s	CERAMIC, CHIP 47PF 5% 50V [for CCU-550(J), CCU-550(UC)]
C1411	1-162-927-11	s	CERAMIC, CHIP 100PF 5% 50V [for CCU-550P(CE)]
C1412	1-162-923-11	s	CERAMIC, CHIP 47PF 5% 50V [for CCU-550(J), CCU-550(UC)]

(VA-175A/175B/175P BOARD)

Ref. No. or Q'ty	Part No.	SP	Description
C1413	1-162-909-11	s	CERAMIC 4PF 0.25PF 50V
C1414	1-162-921-11	s	CERAMIC, CHIP 33PF 5% 50V
C1415	1-126-391-11	s	ELECT 47uF 20% 6.3V
C1416	1-164-156-11	s	CERAMIC 0.1uF 25V
C1417	1-164-218-11	s	CERAMIC 180PF 5% 50V
C1418	1-164-156-11	s	CERAMIC 0.1uF 25V
C1419	1-162-958-11	s	CERAMIC 270PF 5% 50V
C1421	1-164-156-11	s	CERAMIC 0.1uF 25V
C1423	1-162-919-11	s	CERAMIC, CHIP 22PF 5% 50V
C1424	1-164-156-11	s	CERAMIC 0.1uF 25V
C1425	1-164-217-11	s	CERAMIC 150PF 5% 50V
C1426	1-164-363-11	s	CERAMIC 560PF 5% 50V
C1427	1-163-275-11	s	CERAMIC 0.001uF 5% 50V
C1428	1-162-964-11	s	CERAMIC 0.001uF 10% 50V
C1429	1-164-315-11	s	CERAMIC 470PF 5% 50V
C1430	1-162-966-11	s	CERAMIC, CHIP 0.0022uF 10% 50V
C1431	1-126-391-11	s	ELECT 47uF 20% 6.3V
C1432	1-164-156-11	s	CERAMIC 0.1uF 25V
C1433	1-162-922-11	s	CERAMIC, CHIP 39PF 5% 50V
C1434	1-162-927-11	s	CERAMIC, CHIP 100PF 5% 50V
C1435	1-162-927-11	s	CERAMIC, CHIP 100PF 5% 50V
C1436	1-164-217-11	s	CERAMIC 150PF 5% 50V
C1437	1-162-918-11	s	CERAMIC, CHIP 18PF 5% 50V [for CCU-550(J), CCU-550(UC)]
C1437	1-162-921-11	s	CERAMIC, CHIP 33PF 5% 50V [for CCU-550P(CE)]
C1438	1-162-928-11	s	CERAMIC 120PF 5% 50V [for CCU-550(J), CCU-550(UC)]
C1438	1-162-958-11	s	CERAMIC 270PF 5% 50V [for CCU-550P(CE)]
C1439	1-162-927-11	s	CERAMIC, CHIP 100PF 5% 50V
C1440	1-164-156-11	s	CERAMIC 0.1uF 25V
C1441	1-164-156-11	s	CERAMIC 0.1uF 25V
C1442	1-162-918-11	s	CERAMIC, CHIP 18PF 5% 50V
C1443	1-164-217-11	s	CERAMIC 150PF 5% 50V
C1501	1-107-689-21	s	TANTAL 1uF 20% 35V
C1502	1-126-391-11	s	ELECT 47uF 20% 6.3V
C1503	1-126-396-11	s	ELECT, CHIP 47uF 20% 16V
C1504	1-164-156-11	s	CERAMIC 0.1uF 25V
C1505	1-162-970-11	s	CERAMIC, CHIP 0.01uF 10% 25V
C1506	1-135-145-11	s	TANTALUM, CHIP 0.47uF 10% 35V
C1507	1-104-851-11	s	TANTALUM, CHIP 10uF 20% 10V
C1508	1-162-970-11	s	CERAMIC, CHIP 0.01uF 10% 25V
C1509	1-162-970-11	s	CERAMIC, CHIP 0.01uF 10% 25V
C1510	1-162-970-11	s	CERAMIC, CHIP 0.01uF 10% 25V
C1511	1-162-970-11	s	CERAMIC, CHIP 0.01uF 10% 25V
C1512	1-162-970-11	s	CERAMIC, CHIP 0.01uF 10% 25V
C1513	1-164-156-11	s	CERAMIC 0.1uF 25V
C1514	1-104-851-11	s	TANTALUM, CHIP 10uF 20% 10V
C1515	1-162-970-11	s	CERAMIC, CHIP 0.01uF 10% 25V
C1516	1-162-964-11	s	CERAMIC 0.001uF 10% 50V
C1517	1-162-970-11	s	CERAMIC, CHIP 0.01uF 10% 25V
C1518	1-107-689-21	s	TANTAL 1uF 20% 35V
C1519	1-126-391-11	s	ELECT 47uF 20% 6.3V
C1520	1-135-145-11	s	TANTALUM, CHIP 0.47uF 10% 35V
C1521	1-104-851-11	s	TANTALUM, CHIP 10uF 20% 10V
C1522	1-164-156-11	s	CERAMIC 0.1uF 25V
C1523	1-162-970-11	s	CERAMIC, CHIP 0.01uF 10% 25V
C1524	1-162-970-11	s	CERAMIC, CHIP 0.01uF 10% 25V

(VA-175A/175B/175P BOARD)

Ref. No. or Q'ty	Part No.	SP	Description
C1525	1-162-970-11	s	CERAMIC, CHIP 0.01uF 10% 25V
C1526	1-162-957-11	s	CERAMIC 220PF 5% 50V
C1527	1-164-156-11	s	CERAMIC 0.1uF 25V
C1528	1-164-156-11	s	CERAMIC 0.1uF 25V
C1529	1-164-156-11	s	CERAMIC 0.1uF 25V
C1601	1-126-391-11	s	ELECT 47uF 20% 6.3V
C1602	1-164-156-11	s	CERAMIC 0.1uF 25V
C1603	1-164-156-11	s	CERAMIC 0.1uF 25V
C1604	1-126-391-11	s	ELECT 47uF 20% 6.3V
C1605	1-164-156-11	s	CERAMIC 0.1uF 25V
C1606	1-164-156-11	s	CERAMIC 0.1uF 25V
C1607	1-162-919-11	s	CERAMIC, CHIP 22PF 5% 50V
C1608	1-164-156-11	s	CERAMIC 0.1uF 25V
C1609	1-104-851-11	s	TANTALUM, CHIP 10uF 20% 10V
C1610	1-126-391-11	s	ELECT 47uF 20% 6.3V
C1611	1-162-923-11	s	CERAMIC, CHIP 47PF 5% 50V
C1612	1-164-156-11	s	CERAMIC 0.1uF 25V
C1613	1-104-851-11	s	TANTALUM, CHIP 10uF 20% 10V
C1614	1-162-970-11	s	CERAMIC, CHIP 0.01uF 10% 25V
C1615	1-126-396-11	s	ELECT, CHIP 47uF 20% 16V
C1616	1-126-391-11	s	ELECT 47uF 20% 6.3V
C1617	1-164-156-11	s	CERAMIC 0.1uF 25V
C1618	1-164-156-11	s	CERAMIC 0.1uF 25V
C1619	1-164-156-11	s	CERAMIC 0.1uF 25V
C1620	1-164-156-11	s	CERAMIC 0.1uF 25V
C1701	1-107-689-21	s	TANTAL 1uF 20% 35V
C1702	1-126-391-11	s	ELECT 47uF 20% 6.3V
C1703	1-164-156-11	s	CERAMIC 0.1uF 25V
C1704	1-126-391-11	s	ELECT 47uF 20% 6.3V
C1705	1-126-391-11	s	ELECT 47uF 20% 6.3V
C1706	1-126-396-11	s	ELECT, CHIP 47uF 20% 16V
C1707	1-164-156-11	s	CERAMIC 0.1uF 25V
C1708	1-164-156-11	s	CERAMIC 0.1uF 25V
C1709	1-126-391-11	s	ELECT 47uF 20% 6.3V
C1710	1-164-156-11	s	CERAMIC 0.1uF 25V
C1711	1-162-924-11	s	CERAMIC 56PF 5% 50V
C1716	1-104-852-11	s	TANTALUM, CHIP 22uF 20% 10V
C1717	1-162-925-11	s	CERAMIC, CHIP 68PF 5% 50V [for CCU-550(J), CCU-550(UC)]
C1717	1-162-908-11	s	CERAMIC 3PF 0.25PF 50V [for CCU-550P(CE)]
C1718	1-164-156-11	s	CERAMIC 0.1uF 25V
C1719	1-164-156-11	s	CERAMIC 0.1uF 25V
C1720	1-164-156-11	s	CERAMIC 0.1uF 25V
C1721	1-104-852-11	s	TANTALUM, CHIP 22uF 20% 10V
C1722	1-164-156-11	s	CERAMIC 0.1uF 25V
C1723	1-104-852-11	s	TANTALUM, CHIP 22uF 20% 10V
C1801	1-126-391-11	s	ELECT 47uF 20% 6.3V
C1802	1-126-391-11	s	ELECT 47uF 20% 6.3V
C1803	1-164-156-11	s	CERAMIC 0.1uF 25V
C1804	1-164-156-11	s	CERAMIC 0.1uF 25V
C1805	1-104-851-11	s	TANTALUM, CHIP 10uF 20% 10V
C1806	1-104-851-11	s	TANTALUM, CHIP 10uF 20% 10V
C1807	1-164-156-11	s	CERAMIC 0.1uF 25V
C1808	1-164-156-11	s	CERAMIC 0.1uF 25V
C1809	1-164-156-11	s	CERAMIC 0.1uF 25V
C1810	1-164-156-11	s	CERAMIC 0.1uF 25V
C1812	1-164-156-11	s	CERAMIC 0.1uF 25V

(VA-175A/175B/175P BOARD)

Ref. No. or Q'ty	Part No.	SP	Description
CP1501	1-579-713-11	s	OSCILLATOR, CRYSTAL 28.636MHz [for CCU-550(J), CCU-550(UC)]
CP1501	1-579-718-11	s	OSCILLATOR, CRYSTAL 17.734MHz [for CCU-550P(CE)]
CP1502	1-760-267-11	s	VCO, CRYSTAL 14.3818MHz [for CCU-550(J), CCU-550(UC)]
CP1502	1-760-266-11	s	VCO, CRYSTAL 14.18750MHz [for CCU-550P(CE)]
CV1202	1-141-311-11	s	CAP, VAR, TRIMMER
D1	8-719-974-39	s	DIODE HLMP-6300-010
D2	8-719-029-75	s	DIODE RD12UJN-T1
D3	8-719-029-67	s	DIODE RD5.6UJN-T1
D4	8-719-029-75	s	DIODE RD12UJN-T1
D5	8-719-029-67	s	DIODE RD5.6UJN-T1
D6	8-719-029-62	s	DIODE RD3.9UH-T1
D7	8-719-029-62	s	DIODE RD3.9UH-T1
D8	8-759-274-67	s	IC LM4040BIM3X-5.0
D301	8-719-404-35	s	DIODE MA141WK
D302	8-719-404-35	s	DIODE MA141WK
D801	8-719-041-68	s	DIODE RD3.3UH-T1
D802	8-719-041-68	s	DIODE RD3.3UH-T1
D803	8-719-041-68	s	DIODE RD3.3UH-T1
D804	8-719-041-68	s	DIODE RD3.3UH-T1
D805	8-719-404-35	s	DIODE MA141WK
D901	8-719-024-81	s	DIODE 1SS300-TE85L
D902	8-719-024-81	s	DIODE 1SS300-TE85L
D903	8-719-820-41	s	DIODE 1SS302
D1001	8-719-404-35	s	DIODE MA141WK
D1003	8-719-404-35	s	DIODE MA141WK
D1301	8-719-024-81	s	DIODE 1SS300-TE85L
D1303	8-719-024-81	s	DIODE 1SS300-TE85L
D1401	8-719-820-41	s	DIODE 1SS302
D1402	8-719-404-35	s	DIODE MA141WK
D1403	8-719-404-35	s	DIODE MA141WK
D1404	8-719-404-35	s	DIODE MA141WK
D1405	8-719-820-41	s	DIODE 1SS302
D1406	8-719-024-81	s	DIODE 1SS300-TE85L
D1601	8-719-820-41	s	DIODE 1SS302
D1801	8-719-404-35	s	DIODE MA141WK
D1802	8-719-820-41	s	DIODE 1SS302
DL1201	1-415-710-11	s	DELAY LINE, Y (NTSC) [for CCU-550(J), CCU-550(UC)]
DL1201	1-415-711-11	s	DELAY LINE, Y (PAL) [for CCU-550P(CE)]
FL801	1-239-383-12	s	LPF (NTSC SYNC) [for CCU-550(J), CCU-550(UC)]
FL801	1-239-381-21	s	FILTER, LOW-PASS (PAL SYNC) [for CCU-550P(CE)]
FL1101	1-415-811-11	s	DELAY LINE (VISUAL SIGNAL) [for CCU-550(J), CCU-550(UC)]
FL1102	1-236-624-11	s	FILTER, LOW PASS (U/V) [for CCU-550P(CE)]
FL1103	1-236-622-12	s	FILTER, LOW PASS (Q) [for CCU-550(J), CCU-550(UC)]
FL1103	1-236-624-11	s	FILTER, LOW PASS (U/V) [for CCU-550P(CE)]
FL1104	1-235-161-00	s	FILTER, BAND PASS [for CCU-550(J), CCU-550(UC)]
FL1104	1-235-181-00	s	FILTER, BAND PASS [for CCU-550P(CE)]

(VA-175A/175B/175P BOARD)

Ref. No. or Q'ty	Part No.	SP	Description
FL1105	1-402-647-11	s	DELAY LINE (90fl) (NTSC) [for CCU-550(J), CCU-550(UC)]
FL1105	1-402-646-21	s	DELAY LINE (PHASE SHIFTER 90 DEG) [for CCU-550P(CE)]
FL1201	1-239-383-12	s	LPF (NTSC SYNC) [for CCU-550(J), CCU-550(UC)]
FL1201	1-239-381-21	s	FILTER, LOW-PASS (PAL SYNC) [for CCU-550P(CE)]
FL1601	1-235-573-11	s	LOW PASS 3.58MHz [for CCU-550(J), CCU-550(UC)]
FL1601	1-235-572-11	s	FILTER, LOW PASS [for CCU-550P(CE)]
IC1	8-759-173-16	s	IC TL062CPW
IC101	8-759-082-61	s	IC TC4W53FU
IC102	8-759-173-16	s	IC TL062CPW
IC103	8-759-058-58	s	IC TC7S04FU(TE85R)
IC104	8-759-066-59	s	IC TC74HC4053AFS
IC201	8-759-066-59	s	IC TC74HC4053AFS
IC202	8-759-076-06	s	IC TL064CPW
IC203	8-759-271-18	s	IC NJM1496V
IC204	8-759-066-59	s	IC TC74HC4053AFS
IC205	8-759-030-49	s	IC MC1495M
IC206	8-759-066-59	s	IC TC74HC4053AFS
IC207	8-759-260-55	s	IC TLC272CPW-E05
IC301	8-759-066-59	s	IC TC74HC4053AFS
IC302	8-759-076-06	s	IC TL064CPW
IC303	8-759-271-18	s	IC NJM1496V
IC304	8-759-066-59	s	IC TC74HC4053AFS
IC305	8-759-030-49	s	IC MC1495M
IC306	8-759-066-59	s	IC TC74HC4053AFS
IC307	8-759-260-55	s	IC TLC272CPW-E05
IC401	8-759-173-16	s	IC TL062CPW
IC402	8-759-082-61	s	IC TC4W53FU
IC403	8-759-054-61	s	IC CLC505AJE
IC501	8-759-173-16	s	IC TL062CPW
IC502	8-759-082-61	s	IC TC4W53FU
IC503	8-759-054-61	s	IC CLC505AJE
IC601	8-759-173-16	s	IC TL062CPW
IC602	8-759-082-61	s	IC TC4W53FU
IC603	8-759-054-61	s	IC CLC505AJE
IC701	8-759-054-61	s	IC CLC505AJE
IC801	8-759-066-59	s	IC TC74HC4053AFS
IC802	8-759-054-61	s	IC CLC505AJE
IC803	8-759-082-55	s	IC TC7W00FU
IC901	8-759-049-55	s	IC SN74HC00APW-E20
IC902	8-759-082-55	s	IC TC7W00FU
IC903	8-759-160-19	s	IC CXD8826Q
IC904	8-759-745-64	s	IC NJM4560M
IC1001	8-759-239-58	s	IC TC74HC221AF
IC1002	8-759-082-58	s	IC TC7W08FU
IC1003	8-759-049-55	s	IC SN74HC00APW-E20
IC1101	8-759-168-19	s	IC TA78L09F-T1
IC1102	8-759-906-59	s	IC CX22017
IC1201	8-759-054-61	s	IC CLC505AJE
IC1202	8-759-054-61	s	IC CLC505AJE
IC1203	8-759-054-61	s	IC CLC505AJE
IC1301	8-759-101-12	s	IC UPC311G2
IC1401	8-759-907-81	s	IC SN74LS221NS
IC1402	8-759-173-16	s	IC TL062CPW

(VA-175A/175B/175P BOARD)

Ref. No. or Q'ty	Part No.	SP	Description
IC1403	8-759-049-58	s	IC SN74HC04APW-E05
IC1404	8-759-239-58	s	IC TC74HC221AF
IC1405	8-759-049-55	s	IC SN74HC00APW-E20
IC1409	8-759-239-58	s	IC TC74HC221AF
IC1410	8-759-009-46	s	IC MC14528BF
IC1411	8-759-049-58	s	IC SN74HC04APW-E05
IC1412	8-759-049-58	s	IC SN74HC04APW-E05
IC1414	8-759-082-55	s	IC TC7W00FU
IC1501	8-752-335-47	s	IC CXD1216M
IC1502	8-759-066-59	s	IC TC74HC4053AFS
IC1503	8-759-260-55	s	IC TLC272CPW-E05
IC1504	8-759-058-58	s	IC TC7S04FU(TE85R)
IC1505	8-759-083-94	s	IC TC7W74FU [for CCU-550(J), CCU-550(UC)]
IC1506	8-752-335-47	s	IC CXD1216M
IC1507	8-759-926-19	s	IC SN74HC158ANS
IC1508	8-759-239-58	s	IC TC74HC221AF
IC1509	8-752-341-58	s	IC CXD1217Q
IC1510	8-759-907-21	s	IC CX7969
IC1601	8-759-059-50	s	IC MB88351PFV
IC1602	8-759-066-59	s	IC TC74HC4053AFS
IC1603	8-759-195-81	s	IC TC7S86FU(TE85R)
IC1604	8-759-049-55	s	IC SN74HC00APW-E20
IC1605	8-759-195-81	s	IC TC7S86FU(TE85R)
IC1606	8-759-902-88	s	IC SN74LS123NS
IC1607	8-759-076-06	s	IC TL064CPW
IC1701	8-759-911-77	s	IC CX7968A
IC1702	8-759-173-16	s	IC TL062CPW
IC1703	8-759-082-58	s	IC TC7W08FU
IC1704	8-759-049-60	s	IC SN74HC08APW-E05
IC1705	8-759-287-54	s	IC TL084CPW-E20
IC1801	8-759-011-63	s	IC MC74HC4051FEL
IC1802	8-759-359-66	s	IC TL082CPW-E05
IC1803	8-759-082-60	s	IC TC7S66FU
IC1804	8-759-050-94	s	IC SN74HC165APW-E05
IC1805	8-759-009-04	s	IC MC14050BF
IC1806	8-759-147-84	s	IC CXD8072Q
IC1807	8-759-082-58	s	IC TC7W08FU
IC1808	8-759-635-27	s	IC M62352GP
IS1503	1-562-579-21	s	PLUG, SHORTING
JC1401	1-216-864-11	s	METAL, CHIP 0 5% 1/16W [for CCU-550(J), CCU-550(UC)]
JC1501	1-216-864-11	s	METAL, CHIP 0 5% 1/16W [for CCU-550(J), CCU-550(UC)]
JC1502	1-216-864-11	s	METAL, CHIP 0 5% 1/16W [for CCU-550P(CE)]
JC1503	1-216-864-11	s	METAL, CHIP 0 5% 1/16W [for CCU-550(J), CCU-550(UC)]
JC1504	1-216-864-11	s	METAL, CHIP 0 5% 1/16W [for CCU-550P(CE)]
JC1505	1-216-864-11	s	METAL, CHIP 0 5% 1/16W [for CCU-550(J), CCU-550(UC)]
JC1506	1-216-864-11	s	METAL, CHIP 0 5% 1/16W [for CCU-550P(CE)]
JC1507	1-216-864-11	s	METAL, CHIP 0 5% 1/16W [for CCU-550P(CE)]
JC1508	1-216-864-11	s	METAL, CHIP 0 5% 1/16W [for CCU-550(J), CCU-550(UC)]
JC1509	1-216-864-11	s	METAL, CHIP 0 5% 1/16W [for CCU-550(J), CCU-550(UC)]

(VA-175A/175B/175P BOARD)

Ref. No. or Q'ty	Part No.	SP	Description
JC1510	1-216-864-11	s	METAL, CHIP 0 5% 1/16W [for CCU-550P(CE)]
JC1511	1-216-864-11	s	METAL, CHIP 0 5% 1/16W [for CCU-550(J), CCU-550(UC)]
JC1512	1-216-864-11	s	METAL, CHIP 0 5% 1/16W [for CCU-550P(CE)]
JC1513	1-216-864-11	s	METAL, CHIP 0 5% 1/16W [for CCU-550(J), CCU-550(UC)]
JC1514	1-216-864-11	s	METAL, CHIP 0 5% 1/16W [for CCU-550P(CE)]
JC1515	1-216-864-11	s	METAL, CHIP 0 5% 1/16W [for CCU-550P(CE)]
JC1516	1-216-864-11	s	METAL, CHIP 0 5% 1/16W [for CCU-550(J), CCU-550(UC)]
JC1517	1-216-864-11	s	METAL, CHIP 0 5% 1/16W [for CCU-550P(CE)]
JC1518	1-216-864-11	s	METAL, CHIP 0 5% 1/16W [for CCU-550(J), CCU-550(UC)]
JC1519	1-216-864-11	s	METAL, CHIP 0 5% 1/16W [for CCU-550P(CE)]
JC1520	1-216-864-11	s	METAL, CHIP 0 5% 1/16W [for CCU-550P(CE)]
JC1521	1-216-864-11	s	METAL, CHIP 0 5% 1/16W [for CCU-550(J), CCU-550(UC)]
JC1523	1-216-864-11	s	METAL, CHIP 0 5% 1/16W [for CCU-550P(CE)]
JC1524	1-216-864-11	s	METAL, CHIP 0 5% 1/16W [for CCU-550P(CE)]
JC1525	1-216-864-11	s	METAL, CHIP 0 5% 1/16W [for CCU-550P(CE)]
L1	1-414-529-21	s	INDUCTOR (POWER)
L2	1-411-227-21	s	COIL, CHOKE 100UH
L101	1-412-030-11	s	INDUCTOR CHIP 22uH
L102	1-412-030-11	s	INDUCTOR CHIP 22uH
L201	1-412-030-11	s	INDUCTOR CHIP 22uH
L202	1-412-030-11	s	INDUCTOR CHIP 22uH
L301	1-412-030-11	s	INDUCTOR CHIP 22uH
L302	1-412-030-11	s	INDUCTOR CHIP 22uH
L401	1-412-030-11	s	INDUCTOR CHIP 22uH
L402	1-412-030-11	s	INDUCTOR CHIP 22uH
L403	1-412-030-11	s	INDUCTOR CHIP 22uH
L404	1-412-030-11	s	INDUCTOR CHIP 22uH
L501	1-412-030-11	s	INDUCTOR CHIP 22uH
L502	1-412-030-11	s	INDUCTOR CHIP 22uH
L601	1-412-030-11	s	INDUCTOR CHIP 22uH
L602	1-412-030-11	s	INDUCTOR CHIP 22uH
L701	1-412-030-11	s	INDUCTOR CHIP 22uH
L702	1-412-030-11	s	INDUCTOR CHIP 22uH
L703	1-412-030-11	s	INDUCTOR CHIP 22uH
L704	1-412-030-11	s	INDUCTOR CHIP 22uH
L801	1-412-030-11	s	INDUCTOR CHIP 22uH
L802	1-412-030-11	s	INDUCTOR CHIP 22uH
L803	1-412-282-41	s	INDUCTOR 470uH [for CCU-550(J), CCU-550(UC)]
L804	1-412-030-11	s	INDUCTOR CHIP 22uH
L805	1-412-030-11	s	INDUCTOR CHIP 22uH
L901	1-412-030-11	s	INDUCTOR CHIP 22uH
L902	1-412-030-11	s	INDUCTOR CHIP 22uH
L1001	1-412-030-11	s	INDUCTOR CHIP 22uH
L1002	1-412-030-11	s	INDUCTOR CHIP 22uH
L1003	1-412-279-31	s	INDUCTOR 270uH

(VA-175A/175B/175P BOARD)

Ref. No. or Q'ty	Part No.	SP	Description
L1101	1-412-030-11	s	INDUCTOR CHIP 22uH
L1102	1-412-030-11	s	INDUCTOR CHIP 22uH
L1103	1-412-030-11	s	INDUCTOR CHIP 22uH
L1104	1-412-030-11	s	INDUCTOR CHIP 22uH
L1105	1-412-279-31	s	INDUCTOR 270uH
L1201	1-412-030-11	s	INDUCTOR CHIP 22uH
L1202	1-412-030-11	s	INDUCTOR CHIP 22uH
L1203	1-412-030-11	s	INDUCTOR CHIP 22uH
L1204	1-412-030-11	s	INDUCTOR CHIP 22uH
L1205	1-412-030-11	s	INDUCTOR CHIP 22uH
L1206	1-412-030-11	s	INDUCTOR CHIP 22uH
L1301	1-412-030-11	s	INDUCTOR CHIP 22uH
L1302	1-412-030-11	s	INDUCTOR CHIP 22uH
L1303	1-410-656-11	s	INDUCTOR CHIP 150UH
L1304	1-410-385-11	s	INDUCTOR, CHIP 22uH
L1401	1-412-030-11	s	INDUCTOR CHIP 22uH
L1402	1-412-030-11	s	INDUCTOR CHIP 22uH
L1403	1-412-030-11	s	INDUCTOR CHIP 22uH
L1404	1-410-656-11	s	INDUCTOR CHIP 150UH
L1405	1-412-279-31	s	INDUCTOR 270uH [for CCU-550(J), CCU-550(UC)]
L1405	1-412-282-41	s	INDUCTOR 470uH [for CCU-550P(CE)]
L1406	1-412-279-31	s	INDUCTOR 270uH
L1501	1-412-030-11	s	INDUCTOR CHIP 22uH
L1502	1-412-030-11	s	INDUCTOR CHIP 22uH
L1503	1-412-030-11	s	INDUCTOR CHIP 22uH
L1504	1-412-030-11	s	INDUCTOR CHIP 22uH
L1505	1-412-030-11	s	INDUCTOR CHIP 22uH
L1601	1-412-030-11	s	INDUCTOR CHIP 22uH
L1602	1-412-030-11	s	INDUCTOR CHIP 22uH
L1603	1-412-030-11	s	INDUCTOR CHIP 22uH
L1604	1-412-030-11	s	INDUCTOR CHIP 22uH
L1701	1-412-030-11	s	INDUCTOR CHIP 22uH
L1702	1-412-030-11	s	INDUCTOR CHIP 22uH
L1703	1-412-030-11	s	INDUCTOR CHIP 22uH
L1704	1-412-030-11	s	INDUCTOR CHIP 22uH
L1705	1-410-385-11	s	INDUCTOR, CHIP 22uH
L1801	1-412-030-11	s	INDUCTOR CHIP 22uH
L1802	1-412-030-11	s	INDUCTOR CHIP 22uH
Q1	8-729-117-32	s	TRANSISTOR 2SC4177
Q2	8-729-117-16	s	TRANSISTOR 2SA1611-M6
Q3	8-729-117-32	s	TRANSISTOR 2SC4177
Q4	8-729-117-16	s	TRANSISTOR 2SA1611-M6
Q5	8-729-101-07	s	TRANSISTOR 2SB798
Q6	8-729-807-51	s	TRANSISTOR 2SD1623-S
Q101	8-729-024-58	s	TRANSISTOR 2SA1688-5
Q102	8-729-230-38	s	TRANSISTOR 2SC4215Y
Q103	8-729-024-58	s	TRANSISTOR 2SA1688-5
Q104	8-729-024-58	s	TRANSISTOR 2SA1688-5
Q105	8-729-144-07	s	TRANSISTOR 2SC4184-T43
Q106	8-729-024-56	s	TRANSISTOR 2SA1808
Q107	8-729-024-56	s	TRANSISTOR 2SA1808
Q108	8-729-144-07	s	TRANSISTOR 2SC4184-T43
Q109	8-729-024-58	s	TRANSISTOR 2SA1688-5
Q110	8-729-230-38	s	TRANSISTOR 2SC4215Y
Q111	8-729-024-58	s	TRANSISTOR 2SA1688-5
Q112	8-729-024-58	s	TRANSISTOR 2SA1688-5
Q113	8-729-230-38	s	TRANSISTOR 2SC4215Y [for CCU-550(UC)]

(VA-175A/175B/175P BOARD)

Ref. No. or Q'ty	Part No.	SP	Description
Q114	8-729-024-58	s	TRANSISTOR 2SA1688-5
Q201	8-729-230-38	s	TRANSISTOR 2SC4215Y
Q202	8-729-024-58	s	TRANSISTOR 2SA1688-5
Q203	8-729-024-58	s	TRANSISTOR 2SA1688-5
Q204	8-729-230-38	s	TRANSISTOR 2SC4215Y
Q205	8-729-230-38	s	TRANSISTOR 2SC4215Y
Q206	8-729-024-58	s	TRANSISTOR 2SA1688-5
Q207	8-729-026-32	s	TRANSISTOR XP6534
Q209	8-729-024-58	s	TRANSISTOR 2SA1688-5
Q210	8-729-024-58	s	TRANSISTOR 2SA1688-5
Q211	8-729-230-38	s	TRANSISTOR 2SC4215Y
Q212	8-729-024-58	s	TRANSISTOR 2SA1688-5
Q213	8-729-024-58	s	TRANSISTOR 2SA1688-5
Q214	8-729-230-38	s	TRANSISTOR 2SC4215Y
Q215	8-729-024-58	s	TRANSISTOR 2SA1688-5
Q216	8-729-024-58	s	TRANSISTOR 2SA1688-5
Q301	8-729-230-38	s	TRANSISTOR 2SC4215Y
Q302	8-729-024-58	s	TRANSISTOR 2SA1688-5
Q303	8-729-024-58	s	TRANSISTOR 2SA1688-5
Q304	8-729-230-38	s	TRANSISTOR 2SC4215Y
Q305	8-729-230-38	s	TRANSISTOR 2SC4215Y
Q306	8-729-024-58	s	TRANSISTOR 2SA1688-5
Q307	8-729-026-32	s	TRANSISTOR XP6534
Q310	8-729-024-58	s	TRANSISTOR 2SA1688-5
Q311	8-729-024-58	s	TRANSISTOR 2SA1688-5
Q312	8-729-230-38	s	TRANSISTOR 2SC4215Y
Q313	8-729-024-58	s	TRANSISTOR 2SA1688-5
Q314	8-729-024-58	s	TRANSISTOR 2SA1688-5
Q315	8-729-024-58	s	TRANSISTOR 2SA1688-5
Q316	8-729-024-58	s	TRANSISTOR 2SA1688-5
Q401	8-729-026-32	s	TRANSISTOR XP6534
Q402	8-729-230-38	s	TRANSISTOR 2SC4215Y
Q403	8-729-024-58	s	TRANSISTOR 2SA1688-5
Q404	8-729-024-58	s	TRANSISTOR 2SA1688-5
Q405	8-729-421-71	s	TRANSISTOR 2SK620
Q406	8-729-117-32	s	TRANSISTOR 2SC4177
Q501	8-729-026-32	s	TRANSISTOR XP6534
Q502	8-729-024-58	s	TRANSISTOR 2SA1688-5
Q503	8-729-024-58	s	TRANSISTOR 2SA1688-5
Q504	8-729-421-71	s	TRANSISTOR 2SK620
Q505	8-729-117-32	s	TRANSISTOR 2SC4177
Q601	8-729-026-32	s	TRANSISTOR XP6534
Q602	8-729-024-58	s	TRANSISTOR 2SA1688-5
Q603	8-729-024-58	s	TRANSISTOR 2SA1688-5
Q604	8-729-421-71	s	TRANSISTOR 2SK620
Q605	8-729-117-32	s	TRANSISTOR 2SC4177
Q606	8-729-117-32	s	TRANSISTOR 2SC4177
Q607	8-729-117-32	s	TRANSISTOR 2SC4177
Q701	8-729-427-80	s	TRANSISTOR XP6401
Q702	8-729-427-80	s	TRANSISTOR XP6401
Q703	8-729-427-80	s	TRANSISTOR XP6401
Q704	8-729-427-80	s	TRANSISTOR XP6401
Q709	8-729-117-32	s	TRANSISTOR 2SC4177
Q710	8-729-117-32	s	TRANSISTOR 2SC4177
Q711	8-729-117-32	s	TRANSISTOR 2SC4177
Q712	8-729-117-32	s	TRANSISTOR 2SC4177
Q713	8-729-117-32	s	TRANSISTOR 2SC4177
Q801	8-729-427-80	s	TRANSISTOR XP6401
Q802	8-729-116-66	s	TRANSISTOR 2SK508-K53

http://getMANUAL.com

(VA-175A/175B/175P BOARD)

Ref. No. or Q'ty	Part No.	SP	Description
Q803	8-729-427-80	s	TRANSISTOR XP6401
Q804	8-729-116-66	s	TRANSISTOR 2SK508-K53
Q805	8-729-427-80	s	TRANSISTOR XP6401
Q806	8-729-116-66	s	TRANSISTOR 2SK508-K53
Q807	8-729-427-80	s	TRANSISTOR XP6401
Q808	8-729-116-66	s	TRANSISTOR 2SK508-K53
Q809	8-729-117-32	s	TRANSISTOR 2SC4177
Q814	8-729-117-16	s	TRANSISTOR 2SA1611-M6
Q815	8-729-117-16	s	TRANSISTOR 2SA1611-M6
Q817	8-729-117-32	s	TRANSISTOR 2SC4177
Q820	8-729-117-32	s	TRANSISTOR 2SC4177
Q821	8-729-117-16	s	TRANSISTOR 2SA1611-M6
Q822	8-729-117-32	s	TRANSISTOR 2SC4177
Q823	8-729-427-80	s	TRANSISTOR XP6401
Q824	8-729-427-80	s	TRANSISTOR XP6401
Q825	8-729-026-32	s	TRANSISTOR XP6534
Q901	8-729-117-32	s	TRANSISTOR 2SC4177
Q902	8-729-117-16	s	TRANSISTOR 2SA1611-M6
Q903	8-729-117-32	s	TRANSISTOR 2SC4177
Q904	8-729-117-16	s	TRANSISTOR 2SA1611-M6
Q905	8-729-117-16	s	TRANSISTOR 2SA1611-M6
Q1001	8-729-117-16	s	TRANSISTOR 2SA1611-M6
Q1002	8-729-117-32	s	TRANSISTOR 2SC4177
Q1003	8-729-117-32	s	TRANSISTOR 2SC4177
Q1004	8-729-117-32	s	TRANSISTOR 2SC4177
Q1101	8-729-026-32	s	TRANSISTOR XP6534
Q1102	8-729-230-38	s	TRANSISTOR 2SC4215Y
Q1103	8-729-024-58	s	TRANSISTOR 2SA1688-5
Q1104	8-729-024-58	s	TRANSISTOR 2SA1688-5
Q1105	8-729-117-32	s	TRANSISTOR 2SC4177
Q1106	8-729-117-32	s	TRANSISTOR 2SC4177
Q1107	8-729-024-58	s	TRANSISTOR 2SA1688-5
Q1108	8-729-024-58	s	TRANSISTOR 2SA1688-5
Q1109	8-729-230-38	s	TRANSISTOR 2SC4215Y
Q1110	8-729-230-38	s	TRANSISTOR 2SC4215Y
Q1111	8-729-117-32	s	TRANSISTOR 2SC4177
Q1112	8-729-024-58	s	TRANSISTOR 2SA1688-5
Q1113	8-729-117-32	s	TRANSISTOR 2SC4177
Q1114	8-729-024-58	s	TRANSISTOR 2SA1688-5
Q1201	8-729-117-32	s	TRANSISTOR 2SC4177
Q1202	8-729-117-16	s	TRANSISTOR 2SA1611-M6
Q1203	8-729-230-38	s	TRANSISTOR 2SC4215Y
Q1204	8-729-024-58	s	TRANSISTOR 2SA1688-5
Q1205	8-729-026-32	s	TRANSISTOR XP6534
Q1206	8-729-230-38	s	TRANSISTOR 2SC4215Y
Q1207	8-729-024-56	s	TRANSISTOR 2SA1808
Q1208	8-729-117-32	s	TRANSISTOR 2SC4177
Q1209	8-729-230-38	s	TRANSISTOR 2SC4215Y
Q1210	8-729-024-58	s	TRANSISTOR 2SA1688-5
Q1211	8-729-117-32	s	TRANSISTOR 2SC4177
Q1212	8-729-117-32	s	TRANSISTOR 2SC4177
Q1301	8-729-117-32	s	TRANSISTOR 2SC4177
Q1302	8-729-117-32	s	TRANSISTOR 2SC4177
Q1303	8-729-117-32	s	TRANSISTOR 2SC4177
Q1304	8-729-117-16	s	TRANSISTOR 2SA1611-M6
Q1305	8-729-117-32	s	TRANSISTOR 2SC4177
Q1306	8-729-117-32	s	TRANSISTOR 2SC4177
Q1307	8-729-117-32	s	TRANSISTOR 2SC4177
Q1308	8-729-024-58	s	TRANSISTOR 2SA1688-5

(VA-175A/175B/175P BOARD)

Ref. No. or Q'ty	Part No.	SP	Description
Q1309	8-729-024-58	s	TRANSISTOR 2SA1688-5
Q1310	8-729-117-32	s	TRANSISTOR 2SC4177
Q1311	8-729-117-16	s	TRANSISTOR 2SA1611-M6
Q1312	8-729-026-32	s	TRANSISTOR XP6534
Q1313	8-729-117-32	s	TRANSISTOR 2SC4177
Q1314	8-729-117-32	s	TRANSISTOR 2SC4177
Q1401	8-729-117-16	s	TRANSISTOR 2SA1611-M6
Q1402	8-729-117-16	s	TRANSISTOR 2SA1611-M6
Q1403	8-729-117-32	s	TRANSISTOR 2SC4177
Q1404	8-729-117-16	s	TRANSISTOR 2SA1611-M6
Q1405	8-729-117-32	s	TRANSISTOR 2SC4177
Q1501	8-729-118-58	s	TRANSISTOR 2SK852-X4
Q1502	8-729-118-58	s	TRANSISTOR 2SK852-X4
Q1503	8-729-117-32	s	TRANSISTOR 2SC4177
Q1504	8-729-117-32	s	TRANSISTOR 2SC4177 [for CCU-550(J), CCU-550(UC)]
Q1505	8-729-117-16	s	TRANSISTOR 2SA1611-M6 [for CCU-550(J), CCU-550(UC)]
Q1601	8-729-117-32	s	TRANSISTOR 2SC4177
Q1602	8-729-117-16	s	TRANSISTOR 2SA1611-M6
Q1701	8-729-117-32	s	TRANSISTOR 2SC4177
Q1702	8-729-117-16	s	TRANSISTOR 2SA1611-M6
Q1703	8-729-024-58	s	TRANSISTOR 2SA1688-5
Q1704	8-729-026-32	s	TRANSISTOR XP6534
Q1705	8-729-117-32	s	TRANSISTOR 2SC4177
Q1706	8-729-117-16	s	TRANSISTOR 2SA1611-M6
Q1707	8-729-117-16	s	TRANSISTOR 2SA1611-M6
Q1708	8-729-024-58	s	TRANSISTOR 2SA1688-5
Q1709	8-729-026-32	s	TRANSISTOR XP6534
Q1710	8-729-117-32	s	TRANSISTOR 2SC4177
Q1711	8-729-117-16	s	TRANSISTOR 2SA1611-M6
Q1712	8-729-117-16	s	TRANSISTOR 2SA1611-M6
Q1713	8-729-024-58	s	TRANSISTOR 2SA1688-5
Q1801	8-729-117-16	s	TRANSISTOR 2SA1611-M6
Q1802	8-729-117-16	s	TRANSISTOR 2SA1611-M6
Q1803	8-729-117-16	s	TRANSISTOR 2SA1611-M6
Q1804	8-729-117-16	s	TRANSISTOR 2SA1611-M6
R1	1-218-656-11	s	METAL 33 0.50% 1/16W
R2	1-218-656-11	s	METAL 33 0.50% 1/16W
R3	1-218-656-11	s	METAL 33 0.50% 1/16W
R4	1-218-656-11	s	METAL 33 0.50% 1/16W
R5	1-218-656-11	s	METAL 33 0.50% 1/16W
R6	1-218-656-11	s	METAL 33 0.50% 1/16W
R7	1-218-656-11	s	METAL 33 0.50% 1/16W
R8	1-218-656-11	s	METAL 33 0.50% 1/16W
R9	1-218-676-11	s	METAL 220 0.50% 1/16W
R10	1-218-724-11	s	METAL 22K 0.50% 1/16W
R11	1-218-724-11	s	METAL 22K 0.50% 1/16W
R12	1-218-724-11	s	METAL 22K 0.50% 1/16W
R13	1-218-724-11	s	METAL 22K 0.50% 1/16W
R14	1-218-692-11	s	CHIP, METAL 1K 0.50% 1/16W
R15	1-218-692-11	s	CHIP, METAL 1K 0.50% 1/16W
R16	1-218-724-11	s	METAL 22K 0.50% 1/16W
R17	1-218-724-11	s	METAL 22K 0.50% 1/16W
R18	1-218-708-11	s	METAL 4.7K 0.50% 1/16W
R19	1-218-726-11	s	METAL, CHIP 27K 0.50% 1/16W
R20	1-218-724-11	s	METAL 22K 0.50% 1/16W
R21	1-218-724-11	s	METAL 22K 0.50% 1/16W
R22	1-218-724-11	s	METAL 22K 0.50% 1/16W

(VA-175A/175B/175P BOARD)

Ref. No. or Q'ty	Part No.	SP	Description
R23	1-218-724-11	s	METAL 22K 0.50% 1/16W
R101	1-218-716-11	s	METAL 10K 0.50% 1/16W
R102	1-218-668-11	s	METAL 100 0.50% 1/16W
R103	1-218-712-11	s	METAL 6.8K 0.50% 1/16W
R104	1-218-684-11	s	CHIP, METAL 470 0.50% 1/16W
R105	1-218-724-11	s	METAL 22K 0.50% 1/16W
R107	1-218-710-11	s	CHIP, METAL 5.6K 0.50% 1/16W
R108	1-218-668-11	s	METAL 100 0.50% 1/16W
R109	1-218-692-11	s	CHIP, METAL 1K 0.50% 1/16W
R110	1-218-718-11	s	METAL 12K 0.50% 1/16W
R111	1-218-716-11	s	METAL 10K 0.50% 1/16W
R112	1-218-724-11	s	METAL 22K 0.50% 1/16W
R113	1-218-676-11	s	METAL 220 0.50% 1/16W
R115	1-218-668-11	s	METAL 100 0.50% 1/16W
R116	1-218-708-11	s	METAL 4.7K 0.50% 1/16W
R117	1-218-726-11	s	METAL, CHIP 27K 0.50% 1/16W
R118	1-218-668-11	s	METAL 100 0.50% 1/16W
R119	1-218-702-11	s	CHIP, METAL 2.7K 0.50% 1/16W
R120	1-218-706-11	s	METAL 3.9K 0.50% 1/16W [for CCU-550(J), CCU-550(UC)]
R120	1-218-708-11	s	METAL 4.7K 0.50% 1/16W [for CCU-550P(CE)]
R121	1-218-692-11	s	CHIP, METAL 1K 0.50% 1/16W
R122	1-218-668-11	s	METAL 100 0.50% 1/16W
R123	1-218-696-11	s	METAL, CHIP 1.5K 0.50% 1/16W
R124	1-218-668-11	s	METAL 100 0.50% 1/16W
R125	1-218-692-11	s	CHIP, METAL 1K 0.50% 1/16W
R126	1-218-668-11	s	METAL 100 0.50% 1/16W
R127	1-218-708-11	s	METAL 4.7K 0.50% 1/16W
R128	1-218-704-11	s	METAL 3.3K 0.50% 1/16W
R129	1-218-712-11	s	METAL 6.8K 0.50% 1/16W
R130	1-218-712-11	s	METAL 6.8K 0.50% 1/16W
R131	1-218-720-11	s	METAL 15K 0.50% 1/16W
R132	1-218-728-11	s	METAL 33K 0.50% 1/16W
R133	1-218-692-11	s	CHIP, METAL 1K 0.50% 1/16W
R134	1-218-668-11	s	METAL 100 0.50% 1/16W
R135	1-218-714-11	s	METAL 8.2K 0.50% 1/16W
R136	1-218-668-11	s	METAL 100 0.50% 1/16W
R137	1-218-668-11	s	METAL 100 0.50% 1/16W
R138	1-218-704-11	s	METAL 3.3K 0.50% 1/16W
R139	1-218-712-11	s	METAL 6.8K 0.50% 1/16W
R140	1-218-668-11	s	METAL 100 0.50% 1/16W
R141	1-218-714-11	s	METAL 8.2K 0.50% 1/16W [for CCU-550(UC)]
R142	1-218-668-11	s	METAL 100 0.50% 1/16W [for CCU-550(J), CCU-550P(CE)]
R142	1-218-694-11	s	CHIP, METAL 1.2K 0.50% 1/16W [for CCU-550(UC)]
R143	1-218-720-11	s	METAL 15K 0.50% 1/16W [for CCU-550(UC)]
R144	1-218-704-11	s	METAL 3.3K 0.50% 1/16W
R145	1-218-731-11	s	METAL 43K 0.50% 1/16W
R146	1-218-718-11	s	METAL 12K 0.50% 1/16W
R147	1-218-718-11	s	METAL 12K 0.50% 1/16W
R148	1-218-720-11	s	METAL 15K 0.50% 1/16W [for CCU-550(UC)]
R149	1-218-692-11	s	CHIP, METAL 1K 0.50% 1/16W
R151	1-218-668-11	s	METAL 100 0.50% 1/16W
R152	1-218-714-11	s	METAL 8.2K 0.50% 1/16W [for CCU-550(J), CCU-550P(CE)]

(VA-175A/175B/175P BOARD)

Ref. No. or Q'ty	Part No.	SP	Description
R152	1-218-728-11	s	METAL 33K 0.50% 1/16W [for CCU-550(UC)]
R153	1-218-668-11	s	METAL 100 0.50% 1/16W
R201	1-218-716-11	s	METAL 10K 0.50% 1/16W
R202	1-218-668-11	s	METAL 100 0.50% 1/16W
R203	1-218-708-11	s	METAL 4.7K 0.50% 1/16W
R204	1-218-668-11	s	METAL 100 0.50% 1/16W
R205	1-218-692-11	s	CHIP, METAL 1K 0.50% 1/16W
R206	1-218-668-11	s	METAL 100 0.50% 1/16W
R207	1-218-718-11	s	METAL 12K 0.50% 1/16W
R208	1-218-668-11	s	METAL 100 0.50% 1/16W
R209	1-218-724-11	s	METAL 22K 0.50% 1/16W
R210	1-218-716-11	s	METAL 10K 0.50% 1/16W
R214	1-218-740-11	s	METAL 100K 0.50% 1/16W
R215	1-218-692-11	s	CHIP, METAL 1K 0.50% 1/16W
R216	1-218-698-11	s	METAL 1.8K 0.50% 1/16W
R217	1-218-710-11	s	CHIP, METAL 5.6K 0.50% 1/16W
R218	1-218-717-11	s	CHIP, METAL 11K 0.50% 1/16W
R219	1-218-687-11	s	METAL, CHIP 620 0.50% 1/16W
R220	1-218-716-11	s	METAL 10K 0.50% 1/16W
R221	1-218-676-11	s	METAL 220 0.50% 1/16W
R222	1-218-714-11	s	METAL 8.2K 0.50% 1/16W
R223	1-218-688-11	s	METAL 680 0.50% 1/16W
R224	1-218-712-11	s	METAL 6.8K 0.50% 1/16W
R226	1-218-698-11	s	METAL 1.8K 0.50% 1/16W
R227	1-218-679-91	s	CHIP, METAL 300 0.50% 1/16W
R228	1-218-721-11	s	METAL 16K 0.50% 1/16W
R229	1-216-864-11	s	METAL, CHIP 0 5% 1/16W
R230	1-218-708-11	s	METAL 4.7K 0.50% 1/16W
R231	1-218-708-11	s	METAL 4.7K 0.50% 1/16W
R232	1-218-692-11	s	CHIP, METAL 1K 0.50% 1/16W
R233	1-218-668-11	s	METAL 100 0.50% 1/16W
R234	1-218-708-11	s	METAL 4.7K 0.50% 1/16W
R235	1-218-668-11	s	METAL 100 0.50% 1/16W
R236	1-218-712-11	s	METAL 6.8K 0.50% 1/16W
R237	1-218-692-11	s	CHIP, METAL 1K 0.50% 1/16W
R238	1-218-668-11	s	METAL 100 0.50% 1/16W
R239	1-218-714-11	s	METAL 8.2K 0.50% 1/16W
R240	1-218-714-11	s	METAL 8.2K 0.50% 1/16W
R241	1-218-668-11	s	METAL 100 0.50% 1/16W
R242	1-218-721-11	s	METAL 16K 0.50% 1/16W
R244	1-218-706-11	s	METAL 3.9K 0.50% 1/16W
R245	1-218-668-11	s	METAL 100 0.50% 1/16W
R246	1-218-668-11	s	METAL 100 0.50% 1/16W
R247	1-218-732-11	s	METAL 47K 0.50% 1/16W
R248	1-218-692-11	s	CHIP, METAL 1K 0.50% 1/16W
R250	1-218-687-11	s	METAL, CHIP 620 0.50% 1/16W
R251	1-218-710-11	s	CHIP, METAL 5.6K 0.50% 1/16W
R252	1-218-697-11	s	METAL 1.6K 0.50% 1/16W
R253	1-218-708-11	s	METAL 4.7K 0.50% 1/16W
R254	1-218-696-11	s	METAL, CHIP 1.5K 0.50% 1/16W
R255	1-218-687-11	s	METAL, CHIP 620 0.50% 1/16W
R256	1-218-708-11	s	METAL 4.7K 0.50% 1/16W
R257	1-216-864-11	s	METAL, CHIP 0 5% 1/16W
R258	1-218-707-11	s	METAL 4.3K 0.50% 1/16W
R259	1-218-716-11	s	METAL 10K 0.50% 1/16W
R260	1-218-723-11	s	METAL 20K 0.50% 1/16W
R261	1-218-676-11	s	METAL 220 0.50% 1/16W
R262	1-218-720-11	s	METAL 15K 0.50% 1/16W

(VA-175A/175B/175P BOARD)

Ref. No. or Q'ty	Part No.	SP	Description
R263	1-218-712-11	s	METAL 6.8K 0.50% 1/16W
R264	1-218-668-11	s	METAL 100 0.50% 1/16W
R265	1-218-692-11	s	CHIP, METAL 1K 0.50% 1/16W
R266	1-218-716-11	s	METAL 10K 0.50% 1/16W
R268	1-218-692-11	s	CHIP, METAL 1K 0.50% 1/16W
R269	1-218-668-11	s	METAL 100 0.50% 1/16W
R270	1-218-712-11	s	METAL 6.8K 0.50% 1/16W
R271	1-218-668-11	s	METAL 100 0.50% 1/16W
R272	1-218-712-11	s	METAL 6.8K 0.50% 1/16W
R273	1-218-668-11	s	METAL 100 0.50% 1/16W
R274	1-218-712-11	s	METAL 6.8K 0.50% 1/16W
R275	1-218-668-11	s	METAL 100 0.50% 1/16W
R276	1-218-723-11	s	METAL 20K 0.50% 1/16W
R277	1-218-740-11	s	METAL 100K 0.50% 1/16W
R278	1-216-864-11	s	METAL, CHIP 0 5% 1/16W
R279	1-218-724-11	s	METAL 22K 0.50% 1/16W
R280	1-218-692-11	s	CHIP, METAL 1K 0.50% 1/16W
R281	1-218-668-11	s	METAL 100 0.50% 1/16W
R282	1-218-715-11	s	METAL 9.1K 0.50% 1/16W [for CCU-550(J)]
R282	1-218-714-11	s	METAL 8.2K 0.50% 1/16W [for CCU-550(UC)]
R282	1-218-712-11	s	METAL 6.8K 0.50% 1/16W [for CCU-550P(CE)]
R283	1-218-712-11	s	METAL 6.8K 0.50% 1/16W
R284	1-218-668-11	s	METAL 100 0.50% 1/16W
R285	1-218-668-11	s	METAL 100 0.50% 1/16W
R286	1-218-704-11	s	METAL 3.3K 0.50% 1/16W
R301	1-218-716-11	s	METAL 10K 0.50% 1/16W
R302	1-218-668-11	s	METAL 100 0.50% 1/16W
R303	1-218-708-11	s	METAL 4.7K 0.50% 1/16W
R304	1-218-668-11	s	METAL 100 0.50% 1/16W
R305	1-218-692-11	s	CHIP, METAL 1K 0.50% 1/16W
R306	1-218-668-11	s	METAL 100 0.50% 1/16W
R307	1-218-718-11	s	METAL 12K 0.50% 1/16W
R308	1-218-668-11	s	METAL 100 0.50% 1/16W
R309	1-218-724-11	s	METAL 22K 0.50% 1/16W
R310	1-218-716-11	s	METAL 10K 0.50% 1/16W
R314	1-218-740-11	s	METAL 100K 0.50% 1/16W
R315	1-218-692-11	s	CHIP, METAL 1K 0.50% 1/16W
R316	1-218-698-11	s	METAL 1.8K 0.50% 1/16W
R317	1-218-710-11	s	CHIP, METAL 5.6K 0.50% 1/16W
R318	1-218-717-11	s	CHIP, METAL 11K 0.50% 1/16W
R319	1-218-687-11	s	METAL, CHIP 620 0.50% 1/16W
R320	1-218-716-11	s	METAL 10K 0.50% 1/16W
R321	1-218-676-11	s	METAL 220 0.50% 1/16W
R322	1-218-714-11	s	METAL 8.2K 0.50% 1/16W
R323	1-218-688-11	s	METAL 680 0.50% 1/16W
R324	1-218-712-11	s	METAL 6.8K 0.50% 1/16W
R326	1-218-698-11	s	METAL 1.8K 0.50% 1/16W
R327	1-218-679-91	s	CHIP, METAL 300 0.50% 1/16W
R328	1-218-721-11	s	METAL 16K 0.50% 1/16W
R329	1-216-864-11	s	METAL, CHIP 0 5% 1/16W
R330	1-218-708-11	s	METAL 4.7K 0.50% 1/16W
R331	1-218-708-11	s	METAL 4.7K 0.50% 1/16W
R332	1-218-692-11	s	CHIP, METAL 1K 0.50% 1/16W
R333	1-218-668-11	s	METAL 100 0.50% 1/16W
R334	1-218-708-11	s	METAL 4.7K 0.50% 1/16W
R335	1-218-668-11	s	METAL 100 0.50% 1/16W

(VA-175A/175B/175P BOARD)

Ref. No. or Q'ty	Part No.	SP	Description
R336	1-218-712-11	s	METAL 6.8K 0.50% 1/16W
R337	1-218-692-11	s	CHIP, METAL 1K 0.50% 1/16W
R338	1-218-740-11	s	METAL 100K 0.50% 1/16W
R339	1-218-668-11	s	METAL 100 0.50% 1/16W
R340	1-218-714-11	s	METAL 8.2K 0.50% 1/16W
R341	1-218-714-11	s	METAL 8.2K 0.50% 1/16W
R342	1-218-668-11	s	METAL 100 0.50% 1/16W
R344	1-218-721-11	s	METAL 16K 0.50% 1/16W
R346	1-218-706-11	s	METAL 3.9K 0.50% 1/16W
R347	1-218-668-11	s	METAL 100 0.50% 1/16W
R348	1-218-668-11	s	METAL 100 0.50% 1/16W
R349	1-218-732-11	s	METAL 47K 0.50% 1/16W
R350	1-218-692-11	s	CHIP, METAL 1K 0.50% 1/16W
R352	1-218-687-11	s	METAL, CHIP 620 0.50% 1/16W
R353	1-218-710-11	s	CHIP, METAL 5.6K 0.50% 1/16W
R354	1-218-697-11	s	METAL 1.6K 0.50% 1/16W
R355	1-218-708-11	s	METAL 4.7K 0.50% 1/16W
R356	1-218-696-11	s	METAL, CHIP 1.5K 0.50% 1/16W
R357	1-218-687-11	s	METAL, CHIP 620 0.50% 1/16W
R358	1-218-708-11	s	METAL 4.7K 0.50% 1/16W
R359	1-216-864-11	s	METAL, CHIP 0 5% 1/16W
R360	1-218-707-11	s	METAL 4.3K 0.50% 1/16W
R361	1-218-716-11	s	METAL 10K 0.50% 1/16W
R362	1-218-723-11	s	METAL 20K 0.50% 1/16W
R363	1-218-676-11	s	METAL 220 0.50% 1/16W
R364	1-218-720-11	s	METAL 15K 0.50% 1/16W
R365	1-218-712-11	s	METAL 6.8K 0.50% 1/16W
R366	1-218-668-11	s	METAL 100 0.50% 1/16W
R367	1-218-692-11	s	CHIP, METAL 1K 0.50% 1/16W
R368	1-218-716-11	s	METAL 10K 0.50% 1/16W
R370	1-218-692-11	s	CHIP, METAL 1K 0.50% 1/16W
R371	1-218-668-11	s	METAL 100 0.50% 1/16W
R372	1-218-712-11	s	METAL 6.8K 0.50% 1/16W
R373	1-218-668-11	s	METAL 100 0.50% 1/16W
R374	1-218-712-11	s	METAL 6.8K 0.50% 1/16W
R375	1-218-668-11	s	METAL 100 0.50% 1/16W
R376	1-218-712-11	s	METAL 6.8K 0.50% 1/16W
R377	1-218-668-11	s	METAL 100 0.50% 1/16W
R378	1-218-723-11	s	METAL 20K 0.50% 1/16W
R379	1-218-740-11	s	METAL 100K 0.50% 1/16W
R380	1-218-692-11	s	CHIP, METAL 1K 0.50% 1/16W
R381	1-218-740-11	s	METAL 100K 0.50% 1/16W
R382	1-218-715-11	s	METAL 9.1K 0.50% 1/16W [for CCU-550(J)]
R382	1-218-714-11	s	METAL 8.2K 0.50% 1/16W [for CCU-550(UC)]
R382	1-218-712-11	s	METAL 6.8K 0.50% 1/16W [for CCU-550P(CE)]
R383	1-218-712-11	s	METAL 6.8K 0.50% 1/16W
R384	1-218-668-11	s	METAL 100 0.50% 1/16W
R385	1-218-668-11	s	METAL 100 0.50% 1/16W
R386	1-218-668-11	s	METAL 100 0.50% 1/16W
R387	1-218-704-11	s	METAL 3.3K 0.50% 1/16W
R401	1-218-675-11	s	METAL 200 0.50% 1/16W
R402	1-218-728-11	s	METAL 33K 0.50% 1/16W
R403	1-218-724-11	s	METAL 22K 0.50% 1/16W
R404	1-218-724-11	s	METAL 22K 0.50% 1/16W
R405	1-218-690-11	s	METAL, CHIP 820 0.50% 1/16W
R406	1-218-684-11	s	CHIP, METAL 470 0.50% 1/16W

(VA-175A/175B/175P BOARD)

Ref. No. or Q'ty	Part No.	SP	Description
R408	1-218-690-11	s	METAL, CHIP 820 0.50% 1/16W
R409	1-218-684-11	s	CHIP, METAL 470 0.50% 1/16W
R410	1-218-684-11	s	CHIP, METAL 470 0.50% 1/16W
R411	1-216-864-11	s	METAL, CHIP 0 5% 1/16W
R412	1-218-719-11	s	METAL 13K 0.50% 1/16W
R413	1-218-710-11	s	CHIP, METAL 5.6K 0.50% 1/16W
R414	1-218-696-11	s	METAL, CHIP 1.5K 0.50% 1/16W [for CCU-550(J)]
R414	1-218-697-11	s	METAL 1.6K 0.50% 1/16W [for CCU-550(UC), CCU-550P(CE)]
R416	1-218-724-11	s	METAL 22K 0.50% 1/16W
R417	1-218-730-11	s	CHIP, METAL 39K 0.50% 1/16W
R418	1-218-708-11	s	METAL 4.7K 0.50% 1/16W
R419	1-218-668-11	s	METAL 100 0.50% 1/16W
R420	1-216-857-11	s	METAL, CHIP 1M 5% 1/16W
R421	1-218-740-11	s	METAL 100K 0.50% 1/16W
R422	1-218-692-11	s	CHIP, METAL 1K 0.50% 1/16W
R424	1-218-740-11	s	METAL 100K 0.50% 1/16W
R425	1-218-704-11	s	METAL 3.3K 0.50% 1/16W [for CCU-550(J)]
R425	1-218-712-11	s	METAL 6.8K 0.50% 1/16W [for CCU-550(UC)]
R425	1-218-720-11	s	METAL 15K 0.50% 1/16W [for CCU-550P(CE)]
R426	1-218-692-11	s	CHIP, METAL 1K 0.50% 1/16W
R427	1-218-713-11	s	METAL, CHIP 7.5K 0.50% 1/16W
R429	1-218-692-11	s	CHIP, METAL 1K 0.50% 1/16W
R430	1-218-698-11	s	METAL 1.8K 0.50% 1/16W [for CCU-550(J), CCU-550(UC)]
R430	1-218-699-11	s	CHIP, METAL 2K 0.50% 1/16W [for CCU-550P(CE)]
R431	1-218-747-11	s	METAL 200K 0.50% 1/16W
R433	1-218-742-11	s	METAL 120K 0.50% 1/16W
R434	1-218-700-11	s	METAL 2.2K 0.50% 1/16W
R435	1-218-716-11	s	METAL 10K 0.50% 1/16W
R436	1-218-716-11	s	METAL 10K 0.50% 1/16W
R437	1-218-716-11	s	METAL 10K 0.50% 1/16W
R438	1-218-665-11	s	METAL, CHIP 75 0.50% 1/16W
R439	1-216-864-11	s	METAL, CHIP 0 5% 1/16W
R450	1-218-668-11	s	METAL 100 0.50% 1/16W [for CCU-550(J)]
R450	1-218-692-11	s	CHIP, METAL 1K 0.50% 1/16W [for CCU-550(UC), CCU-550P(CE)]
R501	1-218-682-11	s	METAL 390 0.50% 1/16W
R502	1-218-706-11	s	METAL 3.9K 0.50% 1/16W
R504	1-218-692-11	s	CHIP, METAL 1K 0.50% 1/16W
R505	1-218-688-11	s	METAL 680 0.50% 1/16W
R506	1-218-706-11	s	METAL 3.9K 0.50% 1/16W
R507	1-218-676-11	s	METAL 220 0.50% 1/16W
R508	1-218-710-11	s	CHIP, METAL 5.6K 0.50% 1/16W
R509	1-218-708-11	s	METAL 4.7K 0.50% 1/16W [for CCU-550(J)]
R509	1-218-710-11	s	CHIP, METAL 5.6K 0.50% 1/16W [for CCU-550(UC)]
R509	1-218-709-11	s	METAL 5.1K 0.50% 1/16W [for CCU-550P(CE)]
R511	1-218-724-11	s	METAL 22K 0.50% 1/16W
R512	1-218-730-11	s	CHIP, METAL 39K 0.50% 1/16W
R513	1-218-708-11	s	METAL 4.7K 0.50% 1/16W
R514	1-218-668-11	s	METAL 100 0.50% 1/16W
R515	1-216-857-11	s	METAL, CHIP 1M 5% 1/16W

(VA-175A/175B/175P BOARD)

Ref. No. or Q'ty	Part No.	SP	Description
R516	1-218-740-11	s	METAL 100K 0.50% 1/16W
R517	1-218-740-11	s	METAL 100K 0.50% 1/16W
R518	1-218-692-11	s	CHIP, METAL 1K 0.50% 1/16W
R519	1-218-698-11	s	METAL 1.8K 0.50% 1/16W [for CCU-550(J), CCU-550(UC)]
R519	1-218-716-11	s	METAL 10K 0.50% 1/16W [for CCU-550P(CE)]
R520	1-218-692-11	s	CHIP, METAL 1K 0.50% 1/16W
R522	1-218-692-11	s	CHIP, METAL 1K 0.50% 1/16W
R523	1-218-690-11	s	METAL, CHIP 820 0.50% 1/16W [for CCU-550(J)]
R523	1-218-691-11	s	METAL, CHIP 910 0.50% 1/16W [for CCU-550(UC)]
R523	1-218-696-11	s	METAL, CHIP 1.5K 0.50% 1/16W [for CCU-550P(CE)]
R524	1-218-747-11	s	METAL 200K 0.50% 1/16W
R526	1-218-742-11	s	METAL 120K 0.50% 1/16W
R527	1-218-700-11	s	METAL 2.2K 0.50% 1/16W
R528	1-218-716-11	s	METAL 10K 0.50% 1/16W
R529	1-218-716-11	s	METAL 10K 0.50% 1/16W
R530	1-218-716-11	s	METAL 10K 0.50% 1/16W
R531	1-218-665-11	s	METAL, CHIP 75 0.50% 1/16W
R550	1-218-690-11	s	METAL, CHIP 820 0.50% 1/16W [for CCU-550(J), CCU-550(UC)]
R550	1-218-692-11	s	CHIP, METAL 1K 0.50% 1/16W [for CCU-550P(CE)]
R601	1-218-682-11	s	METAL 390 0.50% 1/16W
R602	1-218-706-11	s	METAL 3.9K 0.50% 1/16W
R604	1-218-690-11	s	METAL, CHIP 820 0.50% 1/16W
R605	1-218-688-11	s	METAL 680 0.50% 1/16W
R606	1-218-706-11	s	METAL 3.9K 0.50% 1/16W
R607	1-218-692-11	s	CHIP, METAL 1K 0.50% 1/16W
R608	1-218-710-11	s	CHIP, METAL 5.6K 0.50% 1/16W
R609	1-218-708-11	s	METAL 4.7K 0.50% 1/16W [for CCU-550(J)]
R609	1-218-710-11	s	CHIP, METAL 5.6K 0.50% 1/16W [for CCU-550(UC)]
R609	1-218-709-11	s	METAL 5.1K 0.50% 1/16W [for CCU-550P(CE)]
R611	1-218-724-11	s	METAL 22K 0.50% 1/16W
R612	1-218-730-11	s	CHIP, METAL 39K 0.50% 1/16W
R613	1-218-708-11	s	METAL 4.7K 0.50% 1/16W
R614	1-218-668-11	s	METAL 100 0.50% 1/16W
R615	1-216-857-11	s	METAL, CHIP 1M 5% 1/16W
R616	1-218-740-11	s	METAL 100K 0.50% 1/16W
R617	1-218-740-11	s	METAL 100K 0.50% 1/16W
R618	1-218-692-11	s	CHIP, METAL 1K 0.50% 1/16W
R619	1-218-676-11	s	METAL 220 0.50% 1/16W
R620	1-218-692-11	s	CHIP, METAL 1K 0.50% 1/16W
R621	1-218-707-11	s	METAL 4.3K 0.50% 1/16W
R622	1-218-692-11	s	CHIP, METAL 1K 0.50% 1/16W
R623	1-218-692-11	s	CHIP, METAL 1K 0.50% 1/16W
R624	1-218-708-11	s	METAL 4.7K 0.50% 1/16W
R625	1-218-698-11	s	METAL 1.8K 0.50% 1/16W [for CCU-550(J), CCU-550(UC)]
R625	1-218-716-11	s	METAL 10K 0.50% 1/16W [for CCU-550P(CE)]
R626	1-218-692-11	s	CHIP, METAL 1K 0.50% 1/16W
R628	1-218-692-11	s	CHIP, METAL 1K 0.50% 1/16W
R629	1-218-690-11	s	METAL, CHIP 820 0.50% 1/16W [for CCU-550(J)]

(VA-175A/175B/175P BOARD)

Ref. No. or Q'ty	Part No.	SP	Description
R629	1-218-691-11	s	METAL, CHIP 910 0.50% 1/16W [for CCU-550(UC)]
R629	1-218-696-11	s	METAL, CHIP 1.5K 0.50% 1/16W [for CCU-550P(CE)]
R630	1-218-747-11	s	METAL 200K 0.50% 1/16W
R632	1-218-742-11	s	METAL 120K 0.50% 1/16W
R633	1-218-700-11	s	METAL 2.2K 0.50% 1/16W
R634	1-218-716-11	s	METAL 10K 0.50% 1/16W
R635	1-218-716-11	s	METAL 10K 0.50% 1/16W
R636	1-218-716-11	s	METAL 10K 0.50% 1/16W
R637	1-218-665-11	s	METAL, CHIP 75 0.50% 1/16W
R650	1-218-690-11	s	METAL, CHIP 820 0.50% 1/16W [for CCU-550(J), CCU-550(UC)]
R650	1-218-692-11	s	CHIP, METAL 1K 0.50% 1/16W [for CCU-550P(CE)]
R701	1-218-676-11	s	METAL 220 0.50% 1/16W
R702	1-218-714-11	s	METAL 8.2K 0.50% 1/16W
R703	1-218-730-11	s	CHIP, METAL 39K 0.50% 1/16W
R704	1-218-716-11	s	METAL 10K 0.50% 1/16W
R705	1-218-676-11	s	METAL 220 0.50% 1/16W
R706	1-218-714-11	s	METAL 8.2K 0.50% 1/16W
R707	1-218-730-11	s	CHIP, METAL 39K 0.50% 1/16W
R708	1-218-716-11	s	METAL 10K 0.50% 1/16W
R709	1-218-676-11	s	METAL 220 0.50% 1/16W
R710	1-218-714-11	s	METAL 8.2K 0.50% 1/16W
R711	1-218-730-11	s	CHIP, METAL 39K 0.50% 1/16W
R712	1-218-716-11	s	METAL 10K 0.50% 1/16W
R713	1-218-676-11	s	METAL 220 0.50% 1/16W
R714	1-218-714-11	s	METAL 8.2K 0.50% 1/16W
R715	1-218-728-11	s	METAL 33K 0.50% 1/16W
R716	1-218-716-11	s	METAL 10K 0.50% 1/16W
R717	1-218-668-11	s	METAL 100 0.50% 1/16W
R718	1-218-668-11	s	METAL 100 0.50% 1/16W
R719	1-218-668-11	s	METAL 100 0.50% 1/16W
R720	1-218-668-11	s	METAL 100 0.50% 1/16W
R721	1-218-712-11	s	METAL 6.8K 0.50% 1/16W
R723	1-218-692-11	s	CHIP, METAL 1K 0.50% 1/16W
R724	1-218-696-11	s	METAL, CHIP 1.5K 0.50% 1/16W
R726	1-218-742-11	s	METAL 120K 0.50% 1/16W
R727	1-218-700-11	s	METAL 2.2K 0.50% 1/16W
R728	1-218-716-11	s	METAL 10K 0.50% 1/16W
R729	1-218-716-11	s	METAL 10K 0.50% 1/16W
R730	1-218-716-11	s	METAL 10K 0.50% 1/16W
R731	1-218-665-11	s	METAL, CHIP 75 0.50% 1/16W
R732	1-216-864-11	s	METAL, CHIP 0 5% 1/16W
R733	1-218-740-11	s	METAL 100K 0.50% 1/16W
R804	1-218-676-11	s	METAL 220 0.50% 1/16W
R805	1-218-706-11	s	METAL 3.9K 0.50% 1/16W
R806	1-218-730-11	s	CHIP, METAL 39K 0.50% 1/16W
R807	1-218-716-11	s	METAL 10K 0.50% 1/16W
R808	1-218-724-11	s	METAL 22K 0.50% 1/16W
R809	1-218-704-11	s	METAL 3.3K 0.50% 1/16W
R810	1-218-676-11	s	METAL 220 0.50% 1/16W
R811	1-218-706-11	s	METAL 3.9K 0.50% 1/16W
R812	1-218-730-11	s	CHIP, METAL 39K 0.50% 1/16W
R813	1-218-716-11	s	METAL 10K 0.50% 1/16W
R814	1-218-724-11	s	METAL 22K 0.50% 1/16W
R815	1-218-704-11	s	METAL 3.3K 0.50% 1/16W
R816	1-218-676-11	s	METAL 220 0.50% 1/16W

(VA-175A/175B/175P BOARD)

Ref. No. or Q'ty	Part No.	SP	Description
R817	1-218-706-11	s	METAL 3.9K 0.50% 1/16W
R818	1-218-730-11	s	CHIP, METAL 39K 0.50% 1/16W
R819	1-218-716-11	s	METAL 10K 0.50% 1/16W
R820	1-218-724-11	s	METAL 22K 0.50% 1/16W
R821	1-218-704-11	s	METAL 3.3K 0.50% 1/16W
R822	1-218-676-11	s	METAL 220 0.50% 1/16W
R823	1-218-699-11	s	CHIP, METAL 2K 0.50% 1/16W
R824	1-218-730-11	s	CHIP, METAL 39K 0.50% 1/16W
R825	1-218-716-11	s	METAL 10K 0.50% 1/16W
R826	1-218-724-11	s	METAL 22K 0.50% 1/16W
R827	1-218-704-11	s	METAL 3.3K 0.50% 1/16W
R828	1-218-668-11	s	METAL 100 0.50% 1/16W
R829	1-218-668-11	s	METAL 100 0.50% 1/16W
R830	1-218-668-11	s	METAL 100 0.50% 1/16W
R831	1-218-668-11	s	METAL 100 0.50% 1/16W
R832	1-218-712-11	s	METAL 6.8K 0.50% 1/16W
R833	1-218-668-11	s	METAL 100 0.50% 1/16W
R834	1-218-740-11	s	METAL 100K 0.50% 1/16W
R835	1-218-716-11	s	METAL 10K 0.50% 1/16W
R836	1-218-692-11	s	CHIP, METAL 1K 0.50% 1/16W
R837	1-218-730-11	s	CHIP, METAL 39K 0.50% 1/16W
R838	1-218-712-11	s	METAL 6.8K 0.50% 1/16W
R839	1-218-700-11	s	METAL 2.2K 0.50% 1/16W
R840	1-216-864-11	s	METAL, CHIP 0 5% 1/16W [for CCU-550P(CE)]
R841	1-218-700-11	s	METAL 2.2K 0.50% 1/16W
R844	1-218-716-11	s	METAL 10K 0.50% 1/16W
R850	1-218-694-11	s	CHIP, METAL 1.2K 0.50% 1/16W
R851	1-218-692-11	s	CHIP, METAL 1K 0.50% 1/16W
R852	1-218-716-11	s	METAL 10K 0.50% 1/16W
R853	1-218-706-11	s	METAL 3.9K 0.50% 1/16W
R854	1-218-700-11	s	METAL 2.2K 0.50% 1/16W
R856	1-218-730-11	s	CHIP, METAL 39K 0.50% 1/16W
R857	1-218-700-11	s	METAL 2.2K 0.50% 1/16W
R858	1-218-668-11	s	METAL 100 0.50% 1/16W
R859	1-218-692-11	s	CHIP, METAL 1K 0.50% 1/16W
R864	1-218-715-11	s	METAL 9.1K 0.50% 1/16W
R865	1-218-692-11	s	CHIP, METAL 1K 0.50% 1/16W
R866	1-218-692-11	s	CHIP, METAL 1K 0.50% 1/16W
R867	1-218-695-11	s	METAL 1.3K 0.50% 1/16W
R868	1-218-742-11	s	METAL 120K 0.50% 1/16W
R869	1-218-700-11	s	METAL 2.2K 0.50% 1/16W
R870	1-218-716-11	s	METAL 10K 0.50% 1/16W
R871	1-218-716-11	s	METAL 10K 0.50% 1/16W
R872	1-218-716-11	s	METAL 10K 0.50% 1/16W
R873	1-218-665-11	s	METAL, CHIP 75 0.50% 1/16W
R874	1-218-740-11	s	METAL 100K 0.50% 1/16W
R875	1-218-692-11	s	CHIP, METAL 1K 0.50% 1/16W
R876	1-218-684-11	s	CHIP, METAL 470 0.50% 1/16W
R877	1-218-722-11	s	METAL, CHIP 18K 0.50% 1/16W
R878	1-218-702-11	s	CHIP, METAL 2.7K 0.50% 1/16W
R879	1-218-740-11	s	METAL 100K 0.50% 1/16W
R880	1-218-692-11	s	CHIP, METAL 1K 0.50% 1/16W
R881	1-218-704-11	s	METAL 3.3K 0.50% 1/16W
R882	1-218-703-11	s	METAL, CHIP 3K 0.50% 1/16W [for CCU-550(J), CCU-550(UC)]
R882	1-218-704-11	s	METAL 3.3K 0.50% 1/16W [for CCU-550P(CE)]
R883	1-218-714-11	s	METAL 8.2K 0.50% 1/16W

(VA-175A/175B/175P BOARD)

Ref. No. or Q'ty	Part No.	SP	Description
R884	1-218-728-11	s	METAL 33K 0.50% 1/16W
R885	1-218-703-11	s	METAL, CHIP 3K 0.50% 1/16W [for CCU-550(J), CCU-550(UC)]
R885	1-218-706-11	s	METAL 3.9K 0.50% 1/16W [for CCU-550P(CE)]
R886	1-218-716-11	s	METAL 10K 0.50% 1/16W
R887	1-218-714-11	s	METAL 8.2K 0.50% 1/16W
R888	1-218-668-11	s	METAL 100 0.50% 1/16W
R890	1-218-703-11	s	METAL, CHIP 3K 0.50% 1/16W
R891	1-218-716-11	s	METAL 10K 0.50% 1/16W
R892	1-218-714-11	s	METAL 8.2K 0.50% 1/16W
R893	1-218-668-11	s	METAL 100 0.50% 1/16W
R894	1-218-716-11	s	METAL 10K 0.50% 1/16W
R895	1-218-743-11	s	METAL 130K 0.50% 1/16W
R896	1-216-864-11	s	METAL, CHIP 0 5% 1/16W
R897	1-218-740-11	s	METAL 100K 0.50% 1/16W
R900	1-218-740-11	s	METAL 100K 0.50% 1/16W
R902	1-218-716-11	s	METAL 10K 0.50% 1/16W
R903	1-218-728-11	s	METAL 33K 0.50% 1/16W
R904	1-218-716-11	s	METAL 10K 0.50% 1/16W
R905	1-218-716-11	s	METAL 10K 0.50% 1/16W
R906	1-218-716-11	s	METAL 10K 0.50% 1/16W
R907	1-218-716-11	s	METAL 10K 0.50% 1/16W
R908	1-218-692-11	s	CHIP, METAL 1K 0.50% 1/16W
R909	1-218-716-11	s	METAL 10K 0.50% 1/16W
R910	1-218-716-11	s	METAL 10K 0.50% 1/16W
R911	1-218-716-11	s	METAL 10K 0.50% 1/16W
R912	1-218-716-11	s	METAL 10K 0.50% 1/16W
R913	1-218-716-11	s	METAL 10K 0.50% 1/16W [for CCU-550P(CE)]
R914	1-218-716-11	s	METAL 10K 0.50% 1/16W
R915	1-218-723-11	s	METAL 20K 0.50% 1/16W
R916	1-218-668-11	s	METAL 100 0.50% 1/16W
R917	1-218-668-11	s	METAL 100 0.50% 1/16W
R918	1-218-720-11	s	METAL 15K 0.50% 1/16W
R919	1-218-714-11	s	METAL 8.2K 0.50% 1/16W
R920	1-218-709-11	s	METAL 5.1K 0.50% 1/16W
R921	1-218-724-11	s	METAL 22K 0.50% 1/16W
R922	1-218-728-11	s	METAL 33K 0.50% 1/16W
R923	1-218-728-11	s	METAL 33K 0.50% 1/16W
R924	1-218-652-11	s	METAL 22 0.50% 1/16W
R925	1-218-652-11	s	METAL 22 0.50% 1/16W
R926	1-218-692-11	s	CHIP, METAL 1K 0.50% 1/16W
R927	1-218-728-11	s	METAL 33K 0.50% 1/16W
R928	1-218-716-11	s	METAL 10K 0.50% 1/16W
R929	1-218-728-11	s	METAL 33K 0.50% 1/16W
R930	1-218-728-11	s	METAL 33K 0.50% 1/16W
R931	1-218-716-11	s	METAL 10K 0.50% 1/16W
R932	1-218-728-11	s	METAL 33K 0.50% 1/16W
R1001	1-218-700-11	s	METAL 2.2K 0.50% 1/16W
R1002	1-218-713-11	s	METAL, CHIP 7.5K 0.50% 1/16W
R1003	1-218-700-11	s	METAL 2.2K 0.50% 1/16W
R1004	1-218-700-11	s	METAL 2.2K 0.50% 1/16W
R1005	1-218-704-11	s	METAL 3.3K 0.50% 1/16W
R1006	1-218-714-11	s	METAL 8.2K 0.50% 1/16W
R1007	1-218-696-11	s	METAL, CHIP 1.5K 0.50% 1/16W [for CCU-550(J)]
R1007	1-218-698-11	s	METAL 1.8K 0.50% 1/16W [for CCU-550(UC)]
R1007	1-218-692-11	s	CHIP, METAL 1K 0.50% 1/16W [for CCU-550P(CE)]

(VA-175A/175B/175P BOARD)

Ref. No. or Q'ty	Part No.	SP	Description
R1008	1-218-716-11	s	METAL 10K 0.50% 1/16W
R1009	1-218-710-11	s	CHIP, METAL 5.6K 0.50% 1/16W
R1010	1-218-728-11	s	METAL 33K 0.50% 1/16W
R1011	1-218-714-11	s	METAL 8.2K 0.50% 1/16W
R1012	1-218-714-11	s	METAL 8.2K 0.50% 1/16W
R1013	1-218-718-11	s	METAL 12K 0.50% 1/16W
R1014	1-218-721-11	s	METAL 16K 0.50% 1/16W
R1015	1-218-729-11	s	METAL 36K 0.50% 1/16W
R1016	1-218-740-11	s	METAL 100K 0.50% 1/16W
R1017	1-216-864-11	s	METAL, CHIP 0 5% 1/16W
R1018	1-218-704-11	s	METAL 3.3K 0.50% 1/16W
R1101	1-218-668-11	s	METAL 100 0.50% 1/16W
R1102	1-218-727-11	s	METAL 30K 0.50% 1/16W
R1104	1-218-692-11	s	CHIP, METAL 1K 0.50% 1/16W
R1105	1-218-690-11	s	METAL, CHIP 820 0.50% 1/16W
R1106	1-218-694-11	s	CHIP, METAL 1.2K 0.50% 1/16W
R1107	1-218-690-11	s	METAL, CHIP 820 0.50% 1/16W
R1108	1-218-724-11	s	METAL 22K 0.50% 1/16W
R1109	1-218-724-11	s	METAL 22K 0.50% 1/16W
R1110	1-218-668-11	s	METAL 100 0.50% 1/16W [for CCU-550P(CE)]
R1111	1-218-692-11	s	CHIP, METAL 1K 0.50% 1/16W
R1112	1-218-707-11	s	METAL 4.3K 0.50% 1/16W [for CCU-550(J), CCU-550(UC)]
R1112	1-218-709-11	s	METAL 5.1K 0.50% 1/16W [for CCU-550P(CE)]
R1113	1-218-688-11	s	METAL 680 0.50% 1/16W
R1114	1-218-720-11	s	METAL 15K 0.50% 1/16W [for CCU-550(J), CCU-550(UC)]
R1114	1-218-719-11	s	METAL 13K 0.50% 1/16W [for CCU-550P(CE)]
R1115	1-218-726-11	s	METAL, CHIP 27K 0.50% 1/16W
R1116	1-218-718-11	s	METAL 12K 0.50% 1/16W
R1117	1-218-712-11	s	METAL 6.8K 0.50% 1/16W
R1118	1-218-668-11	s	METAL 100 0.50% 1/16W [for CCU-550P(CE)]
R1119	1-218-704-11	s	METAL 3.3K 0.50% 1/16W
R1120	1-218-684-11	s	CHIP, METAL 470 0.50% 1/16W [for CCU-550(J), CCU-550(UC)]
R1120	1-218-692-11	s	CHIP, METAL 1K 0.50% 1/16W [for CCU-550P(CE)]
R1121	1-218-719-11	s	METAL 13K 0.50% 1/16W
R1122	1-218-717-11	s	CHIP, METAL 11K 0.50% 1/16W
R1123	1-218-684-11	s	CHIP, METAL 470 0.50% 1/16W [for CCU-550(J), CCU-550(UC)]
R1123	1-218-692-11	s	CHIP, METAL 1K 0.50% 1/16W [for CCU-550P(CE)]
R1124	1-218-706-11	s	METAL 3.9K 0.50% 1/16W [for CCU-550(J), CCU-550(UC)]
R1124	1-218-709-11	s	METAL 5.1K 0.50% 1/16W [for CCU-550P(CE)]
R1125	1-218-704-11	s	METAL 3.3K 0.50% 1/16W
R1126	1-218-687-11	s	METAL, CHIP 620 0.50% 1/16W
R1127	1-218-668-11	s	METAL 100 0.50% 1/16W
R1128	1-218-709-11	s	METAL 5.1K 0.50% 1/16W [for CCU-550(J), CCU-550(UC)]
R1128	1-218-707-11	s	METAL 4.3K 0.50% 1/16W [for CCU-550P(CE)]
R1129	1-218-692-11	s	CHIP, METAL 1K 0.50% 1/16W [for CCU-550(J), CCU-550(UC)]
R1129	1-218-702-11	s	CHIP, METAL 2.7K 0.50% 1/16W [for CCU-550P(CE)]

(VA-175A/175B/175P BOARD)

Ref. No. or Q'ty	Part No.	SP	Description
R1130	1-218-726-11	s	METAL, CHIP 27K 0.50% 1/16W
R1131	1-218-724-11	s	METAL 22K 0.50% 1/16W
R1132	1-218-716-11	s	METAL 10K 0.50% 1/16W
R1133	1-218-734-11	s	METAL, CHIP 56K 0.50% 1/16W
R1134	1-218-686-11	s	METAL 560 0.50% 1/16W
R1135	1-218-724-11	s	METAL 22K 0.50% 1/16W
R1136	1-218-724-11	s	METAL 22K 0.50% 1/16W
R1137	1-218-734-11	s	METAL, CHIP 56K 0.50% 1/16W
R1138	1-218-686-11	s	METAL 560 0.50% 1/16W
R1139	1-218-724-11	s	METAL 22K 0.50% 1/16W
R1140	1-218-660-91	s	METAL 47 0.50% 1/16W
R1141	1-218-724-11	s	METAL 22K 0.50% 1/16W
R1142	1-218-740-11	s	METAL 100K 0.50% 1/16W [for CCU-550(J), CCU-550(UC)]
R1143	1-218-714-11	s	METAL 8.2K 0.50% 1/16W
R1144	1-218-700-11	s	METAL 2.2K 0.50% 1/16W
R1145	1-218-704-11	s	METAL 3.3K 0.50% 1/16W
R1146	1-218-711-11	s	METAL 6.2K 0.50% 1/16W
R1147	1-218-730-11	s	CHIP, METAL 39K 0.50% 1/16W
R1148	1-218-716-11	s	METAL 10K 0.50% 1/16W
R1149	1-218-704-11	s	METAL 3.3K 0.50% 1/16W
R1150	1-218-692-11	s	CHIP, METAL 1K 0.50% 1/16W
R1151	1-218-690-11	s	METAL, CHIP 820 0.50% 1/16W
R1152	1-218-704-11	s	METAL 3.3K 0.50% 1/16W
R1153	1-218-676-11	s	METAL 220 0.50% 1/16W
R1154	1-218-721-11	s	METAL 16K 0.50% 1/16W
R1155	1-218-718-11	s	METAL 12K 0.50% 1/16W
R1156	1-218-716-11	s	METAL 10K 0.50% 1/16W
R1157	1-218-692-11	s	CHIP, METAL 1K 0.50% 1/16W
R1158	1-218-692-11	s	CHIP, METAL 1K 0.50% 1/16W
R1159	1-218-710-11	s	CHIP, METAL 5.6K 0.50% 1/16W
R1201	1-218-706-11	s	METAL 3.9K 0.50% 1/16W
R1202	1-218-700-11	s	METAL 2.2K 0.50% 1/16W
R1203	1-218-730-11	s	CHIP, METAL 39K 0.50% 1/16W
R1204	1-218-708-11	s	METAL 4.7K 0.50% 1/16W
R1205	1-218-710-11	s	CHIP, METAL 5.6K 0.50% 1/16W [for CCU-550(UC)]
R1207	1-218-698-11	s	METAL 1.8K 0.50% 1/16W
R1208	1-218-728-11	s	METAL 33K 0.50% 1/16W [for CCU-550(UC)]
R1209	1-218-692-11	s	CHIP, METAL 1K 0.50% 1/16W
R1210	1-218-748-11	s	METAL 220K 0.50% 1/16W
R1211	1-218-706-11	s	METAL 3.9K 0.50% 1/16W
R1213	1-218-679-91	s	CHIP, METAL 300 0.50% 1/16W
R1214	1-218-679-91	s	CHIP, METAL 300 0.50% 1/16W
R1215	1-218-716-11	s	METAL 10K 0.50% 1/16W
R1216	1-218-668-11	s	METAL 100 0.50% 1/16W
R1217	1-218-708-11	s	METAL 4.7K 0.50% 1/16W
R1218	1-218-705-11	s	METAL 3.6K 0.50% 1/16W
R1219	1-218-726-11	s	METAL, CHIP 27K 0.50% 1/16W
R1221	1-218-699-11	s	CHIP, METAL 2K 0.50% 1/16W [for CCU-550(J), CCU-550(UC)]
R1221	1-218-698-11	s	METAL 1.8K 0.50% 1/16W [for CCU-550P(CE)]
R1222	1-218-720-11	s	METAL 15K 0.50% 1/16W
R1223	1-218-720-11	s	METAL 15K 0.50% 1/16W
R1224	1-218-706-11	s	METAL 3.9K 0.50% 1/16W
R1225	1-218-698-11	s	METAL 1.8K 0.50% 1/16W
R1226	1-218-696-11	s	METAL, CHIP 1.5K 0.50% 1/16W
R1227	1-218-686-11	s	METAL 560 0.50% 1/16W

(VA-175A/175B/175P BOARD)

Ref. No. or Q'ty	Part No.	SP	Description
R1228	1-218-710-11	s	CHIP, METAL 5.6K 0.50% 1/16W
R1229	1-218-704-11	s	METAL 3.3K 0.50% 1/16W
R1230	1-218-710-11	s	CHIP, METAL 5.6K 0.50% 1/16W
R1231	1-218-716-11	s	METAL 10K 0.50% 1/16W
R1232	1-218-668-11	s	METAL 100 0.50% 1/16W
R1233	1-218-708-11	s	METAL 4.7K 0.50% 1/16W
R1234	1-218-692-11	s	CHIP, METAL 1K 0.50% 1/16W
R1235	1-218-700-11	s	METAL 2.2K 0.50% 1/16W
R1237	1-218-696-11	s	METAL, CHIP 1.5K 0.50% 1/16W
R1238	1-218-734-11	s	METAL, CHIP 56K 0.50% 1/16W
R1239	1-218-700-11	s	METAL 2.2K 0.50% 1/16W
R1240	1-218-716-11	s	METAL 10K 0.50% 1/16W
R1241	1-218-716-11	s	METAL 10K 0.50% 1/16W
R1242	1-218-716-11	s	METAL 10K 0.50% 1/16W
R1243	1-218-665-11	s	METAL, CHIP 75 0.50% 1/16W
R1244	1-218-665-11	s	METAL, CHIP 75 0.50% 1/16W
R1245	1-218-692-11	s	CHIP, METAL 1K 0.50% 1/16W
R1246	1-218-716-11	s	METAL 10K 0.50% 1/16W [for CCU-550(J), CCU-550(UC)]
R1246	1-218-705-11	s	METAL 3.6K 0.50% 1/16W [for CCU-550P(CE)]
R1247	1-218-707-11	s	METAL 4.3K 0.50% 1/16W [for CCU-550(J), CCU-550(UC)]
R1247	1-218-697-11	s	METAL 1.6K 0.50% 1/16W [for CCU-550P(CE)]
R1248	1-218-700-11	s	METAL 2.2K 0.50% 1/16W
R1250	1-218-694-11	s	CHIP, METAL 1.2K 0.50% 1/16W
R1251	1-218-742-11	s	METAL 120K 0.50% 1/16W
R1252	1-218-700-11	s	METAL 2.2K 0.50% 1/16W
R1253	1-218-716-11	s	METAL 10K 0.50% 1/16W
R1254	1-218-716-11	s	METAL 10K 0.50% 1/16W
R1255	1-218-716-11	s	METAL 10K 0.50% 1/16W
R1256	1-218-665-11	s	METAL, CHIP 75 0.50% 1/16W
R1257	1-218-715-11	s	METAL 9.1K 0.50% 1/16W
R1258	1-218-716-11	s	METAL 10K 0.50% 1/16W
R1259	1-218-744-11	s	METAL 150K 0.50% 1/16W
R1260	1-218-746-11	s	METAL 180K 0.50% 1/16W
R1301	1-218-724-11	s	METAL 22K 0.50% 1/16W
R1302	1-218-676-11	s	METAL 220 0.50% 1/16W
R1303	1-218-700-11	s	METAL 2.2K 0.50% 1/16W
R1304	1-218-708-11	s	METAL 4.7K 0.50% 1/16W
R1305	1-218-652-11	s	METAL 22 0.50% 1/16W
R1306	1-218-692-11	s	CHIP, METAL 1K 0.50% 1/16W
R1307	1-218-700-11	s	METAL 2.2K 0.50% 1/16W
R1308	1-218-724-11	s	METAL 22K 0.50% 1/16W
R1309	1-218-676-11	s	METAL 220 0.50% 1/16W
R1310	1-218-724-11	s	METAL 22K 0.50% 1/16W
R1311	1-218-700-11	s	METAL 2.2K 0.50% 1/16W
R1312	1-218-692-11	s	CHIP, METAL 1K 0.50% 1/16W
R1313	1-218-698-11	s	METAL 1.8K 0.50% 1/16W
R1314	1-218-704-11	s	METAL 3.3K 0.50% 1/16W
R1315	1-218-708-11	s	METAL 4.7K 0.50% 1/16W
R1316	1-218-707-11	s	METAL 4.3K 0.50% 1/16W
R1317	1-218-668-11	s	METAL 100 0.50% 1/16W
R1318	1-218-692-11	s	CHIP, METAL 1K 0.50% 1/16W
R1319	1-218-740-11	s	METAL 100K 0.50% 1/16W
R1320	1-218-708-11	s	METAL 4.7K 0.50% 1/16W
R1321	1-218-744-11	s	METAL 150K 0.50% 1/16W
R1322	1-218-716-11	s	METAL 10K 0.50% 1/16W

(VA-175A/175B/175P BOARD)

Ref. No. or Q'ty	Part No.	SP	Description
R1323	1-218-692-11	s	CHIP, METAL 1K 0.50% 1/16W
R1324	1-218-744-11	s	METAL 150K 0.50% 1/16W
R1325	1-216-857-11	s	METAL, CHIP 1M 5% 1/16W
R1326	1-218-700-11	s	METAL 2.2K 0.50% 1/16W
R1327	1-218-710-11	s	CHIP, METAL 5.6K 0.50% 1/16W
R1328	1-218-708-11	s	METAL 4.7K 0.50% 1/16W
R1329	1-218-708-11	s	METAL 4.7K 0.50% 1/16W
R1330	1-218-700-11	s	METAL 2.2K 0.50% 1/16W
R1331	1-218-696-11	s	METAL, CHIP 1.5K 0.50% 1/16W
R1332	1-218-704-11	s	METAL 3.3K 0.50% 1/16W
R1333	1-218-708-11	s	METAL 4.7K 0.50% 1/16W
R1335	1-218-708-11	s	METAL 4.7K 0.50% 1/16W
R1336	1-218-718-11	s	METAL 12K 0.50% 1/16W
R1337	1-218-716-11	s	METAL 10K 0.50% 1/16W
R1338	1-218-704-11	s	METAL 3.3K 0.50% 1/16W
R1339	1-218-716-11	s	METAL 10K 0.50% 1/16W
R1401	1-218-720-11	s	METAL 15K 0.50% 1/16W
R1402	1-218-716-11	s	METAL 10K 0.50% 1/16W
R1403	1-218-695-11	s	METAL 1.3K 0.50% 1/16W
R1404	1-218-708-11	s	METAL 4.7K 0.50% 1/16W
R1405	1-218-712-11	s	METAL 6.8K 0.50% 1/16W
R1406	1-218-705-11	s	METAL 3.6K 0.50% 1/16W
R1409	1-218-692-11	s	CHIP, METAL 1K 0.50% 1/16W
R1410	1-218-706-11	s	METAL 3.9K 0.50% 1/16W
R1411	1-218-698-11	s	METAL 1.8K 0.50% 1/16W
R1412	1-218-694-11	s	CHIP, METAL 1.2K 0.50% 1/16W
R1413	1-218-716-11	s	METAL 10K 0.50% 1/16W
R1414	1-218-720-11	s	METAL 15K 0.50% 1/16W
R1415	1-218-676-11	s	METAL 220 0.50% 1/16W
R1416	1-218-708-11	s	METAL 4.7K 0.50% 1/16W
R1417	1-218-664-11	s	METAL 68 0.50% 1/16W
R1418	1-218-715-11	s	METAL 9.1K 0.50% 1/16W
R1419	1-218-715-11	s	METAL 9.1K 0.50% 1/16W
R1420	1-218-692-11	s	CHIP, METAL 1K 0.50% 1/16W
R1421	1-218-732-11	s	METAL 47K 0.50% 1/16W
R1422	1-218-692-11	s	CHIP, METAL 1K 0.50% 1/16W
R1425	1-218-678-11	s	METAL, CHIP 270 0.50% 1/16W
R1427	1-218-700-11	s	METAL 2.2K 0.50% 1/16W
R1428	1-218-735-11	s	METAL 62K 0.50% 1/16W
R1429	1-218-736-11	s	METAL 68K 0.50% 1/16W
R1430	1-218-716-11	s	METAL 10K 0.50% 1/16W
R1431	1-218-720-11	s	METAL 15K 0.50% 1/16W
R1432	1-218-668-11	s	METAL 100 0.50% 1/16W
R1433	1-218-716-11	s	METAL 10K 0.50% 1/16W
R1434	1-218-716-11	s	METAL 10K 0.50% 1/16W
R1435	1-218-726-11	s	METAL, CHIP 27K 0.50% 1/16W
R1436	1-218-676-11	s	METAL 220 0.50% 1/16W
R1437	1-218-701-11	s	METAL 2.4K 0.50% 1/16W
R1438	1-218-712-11	s	METAL 6.8K 0.50% 1/16W
R1439	1-218-720-11	s	METAL 15K 0.50% 1/16W
R1441	1-216-864-11	s	METAL, CHIP 0 5% 1/16W
R1442	1-218-710-11	s	CHIP, METAL 5.6K 0.50% 1/16W
R1443	1-218-676-11	s	METAL 220 0.50% 1/16W
R1444	1-218-700-11	s	METAL 2.2K 0.50% 1/16W
R1445	1-218-700-11	s	METAL 2.2K 0.50% 1/16W
R1446	1-218-692-11	s	CHIP, METAL 1K 0.50% 1/16W
R1447	1-218-700-11	s	METAL 2.2K 0.50% 1/16W
R1448	1-218-692-11	s	CHIP, METAL 1K 0.50% 1/16W
R1449	1-218-700-11	s	METAL 2.2K 0.50% 1/16W

(VA-175A/175B/175P BOARD)

Ref. No. or Q'ty	Part No.	SP	Description
R1450	1-218-712-11	s	METAL 6.8K 0.50% 1/16W
R1451	1-218-668-11	s	METAL 100 0.50% 1/16W
R1452	1-218-712-11	s	METAL 6.8K 0.50% 1/16W
R1453	1-218-692-11	s	CHIP, METAL 1K 0.50% 1/16W
R1454	1-218-692-11	s	CHIP, METAL 1K 0.50% 1/16W
R1457	1-218-705-11	s	METAL 3.6K 0.50% 1/16W
R1459	1-218-692-11	s	CHIP, METAL 1K 0.50% 1/16W
R1460	1-218-676-11	s	METAL 220 0.50% 1/16W
R1461	1-218-676-11	s	METAL 220 0.50% 1/16W
R1462	1-218-700-11	s	METAL 2.2K 0.50% 1/16W
R1463	1-218-702-11	s	CHIP, METAL 2.7K 0.50% 1/16W [for CCU-550(J), CCU-550(UC)]
R1463	1-216-864-11	s	METAL, CHIP 0 5% 1/16W [for CCU-550P(CE)]
R1499	1-218-732-11	s	METAL 47K 0.50% 1/16W [for CCU-550(J), CCU-550(UC)]
R1501	1-218-700-11	s	METAL 2.2K 0.50% 1/16W
R1502	1-218-702-11	s	CHIP, METAL 2.7K 0.50% 1/16W
R1503	1-218-692-11	s	CHIP, METAL 1K 0.50% 1/16W
R1504	1-218-728-11	s	METAL 33K 0.50% 1/16W
R1505	1-218-716-11	s	METAL 10K 0.50% 1/16W
R1506	1-218-716-11	s	METAL 10K 0.50% 1/16W
R1507	1-218-732-11	s	METAL 47K 0.50% 1/16W
R1508	1-218-700-11	s	METAL 2.2K 0.50% 1/16W
R1509	1-218-722-11	s	METAL, CHIP 18K 0.50% 1/16W
R1510	1-218-723-11	s	METAL 20K 0.50% 1/16W
R1511	1-218-742-11	s	METAL 120K 0.50% 1/16W
R1512	1-218-692-11	s	CHIP, METAL 1K 0.50% 1/16W [for CCU-550P(CE)]
R1513	1-218-692-11	s	CHIP, METAL 1K 0.50% 1/16W
R1514	1-218-726-11	s	METAL, CHIP 27K 0.50% 1/16W
R1515	1-218-708-11	s	METAL 4.7K 0.50% 1/16W
R1516	1-218-692-11	s	CHIP, METAL 1K 0.50% 1/16W
R1517	1-218-692-11	s	CHIP, METAL 1K 0.50% 1/16W
R1518	1-218-724-11	s	METAL 22K 0.50% 1/16W
R1519	1-218-724-11	s	METAL 22K 0.50% 1/16W
R1520	1-218-724-11	s	METAL 22K 0.50% 1/16W
R1521	1-218-724-11	s	METAL 22K 0.50% 1/16W
R1522	1-218-708-11	s	METAL 4.7K 0.50% 1/16W
R1523	1-218-696-11	s	METAL, CHIP 1.5K 0.50% 1/16W
R1524	1-218-692-11	s	CHIP, METAL 1K 0.50% 1/16W
R1525	1-218-692-11	s	CHIP, METAL 1K 0.50% 1/16W
R1526	1-216-857-11	s	METAL, CHIP 1M 5% 1/16W
R1527	1-218-692-11	s	CHIP, METAL 1K 0.50% 1/16W
R1528	1-218-716-11	s	METAL 10K 0.50% 1/16W
R1529	1-218-700-11	s	METAL 2.2K 0.50% 1/16W
R1530	1-218-728-11	s	METAL 33K 0.50% 1/16W
R1531	1-218-692-11	s	CHIP, METAL 1K 0.50% 1/16W
R1532	1-218-728-11	s	METAL 33K 0.50% 1/16W
R1533	1-218-728-11	s	METAL 33K 0.50% 1/16W
R1534	1-218-728-11	s	METAL 33K 0.50% 1/16W
R1535	1-218-728-11	s	METAL 33K 0.50% 1/16W
R1536	1-218-692-11	s	CHIP, METAL 1K 0.50% 1/16W
R1537	1-218-732-11	s	METAL 47K 0.50% 1/16W
R1538	1-218-732-11	s	METAL 47K 0.50% 1/16W
R1539	1-218-732-11	s	METAL 47K 0.50% 1/16W
R1540	1-218-732-11	s	METAL 47K 0.50% 1/16W
R1541	1-218-668-11	s	METAL 100 0.50% 1/16W [for CCU-550(J), CCU-550(UC)]
R1542	1-218-668-11	s	METAL 100 0.50% 1/16W [for CCU-550(J), CCU-550(UC)]

(VA-175A/175B/175P BOARD)

Ref. No. or Q'ty	Part No.	SP	Description
R1544	1-216-864-11	s	METAL, CHIP 0 5% 1/16W [for CCU-550(J), CCU-550(UC)]
R1545	1-218-722-11	s	METAL, CHIP 18K 0.50% 1/16W [for CCU-550(J), CCU-550(UC)]
R1546	1-218-740-11	s	METAL 100K 0.50% 1/16W [for CCU-550(J), CCU-550(UC)]
R1547	1-218-724-11	s	METAL 22K 0.50% 1/16W [for CCU-550(J), CCU-550(UC)]
R1548	1-218-708-11	s	METAL 4.7K 0.50% 1/16W
R1601	1-218-701-11	s	METAL 2.4K 0.50% 1/16W
R1603	1-218-668-11	s	METAL 100 0.50% 1/16W
R1604	1-218-724-11	s	METAL 22K 0.50% 1/16W
R1605	1-218-701-11	s	METAL 2.4K 0.50% 1/16W
R1606	1-218-724-11	s	METAL 22K 0.50% 1/16W
R1607	1-218-740-11	s	METAL 100K 0.50% 1/16W
R1608	1-218-740-11	s	METAL 100K 0.50% 1/16W
R1609	1-218-668-11	s	METAL 100 0.50% 1/16W
R1610	1-218-700-11	s	METAL 2.2K 0.50% 1/16W
R1611	1-218-716-11	s	METAL 10K 0.50% 1/16W
R1613	1-218-692-11	s	CHIP, METAL 1K 0.50% 1/16W
R1614	1-218-702-11	s	CHIP, METAL 2.7K 0.50% 1/16W
R1615	1-218-716-11	s	METAL 10K 0.50% 1/16W [for CCU-550(J), CCU-550(UC)]
R1616	1-218-668-11	s	METAL 100 0.50% 1/16W
R1617	1-218-700-11	s	METAL 2.2K 0.50% 1/16W
R1618	1-218-716-11	s	METAL 10K 0.50% 1/16W
R1619	1-218-725-11	s	METAL 24K 0.50% 1/16W
R1620	1-218-723-11	s	METAL 20K 0.50% 1/16W
R1621	1-218-692-11	s	CHIP, METAL 1K 0.50% 1/16W
R1622	1-218-724-11	s	METAL 22K 0.50% 1/16W
R1623	1-216-864-11	s	METAL, CHIP 0 5% 1/16W
R1624	1-218-719-11	s	METAL 13K 0.50% 1/16W
R1625	1-218-704-11	s	METAL 3.3K 0.50% 1/16W
R1626	1-218-696-11	s	METAL, CHIP 1.5K 0.50% 1/16W
R1627	1-218-700-11	s	METAL 2.2K 0.50% 1/16W
R1628	1-218-692-11	s	CHIP, METAL 1K 0.50% 1/16W
R1629	1-218-692-11	s	CHIP, METAL 1K 0.50% 1/16W
R1630	1-218-700-11	s	METAL 2.2K 0.50% 1/16W
R1631	1-218-692-11	s	CHIP, METAL 1K 0.50% 1/16W
R1632	1-218-704-11	s	METAL 3.3K 0.50% 1/16W [for CCU-550(J), CCU-550(UC)]
R1632	1-218-703-11	s	METAL, CHIP 3K 0.50% 1/16W [for CCU-550P(CE)]
R1633	1-218-711-11	s	METAL 6.2K 0.50% 1/16W [for CCU-550(J), CCU-550(UC)]
R1701	1-218-732-11	s	METAL 47K 0.50% 1/16W
R1702	1-218-732-11	s	METAL 47K 0.50% 1/16W
R1703	1-218-740-11	s	METAL 100K 0.50% 1/16W
R1704	1-216-864-11	s	METAL, CHIP 0 5% 1/16W [for CCU-550P(CE)]
R1705	1-216-864-11	s	METAL, CHIP 0 5% 1/16W [for CCU-550(J), CCU-550(UC)]
R1706	1-218-731-11	s	METAL 43K 0.50% 1/16W
R1707	1-216-864-11	s	METAL, CHIP 0 5% 1/16W
R1709	1-218-718-11	s	METAL 12K 0.50% 1/16W
R1710	1-218-716-11	s	METAL 10K 0.50% 1/16W
R1711	1-218-722-11	s	METAL, CHIP 18K 0.50% 1/16W
R1712	1-218-703-11	s	METAL, CHIP 3K 0.50% 1/16W
R1713	1-218-675-11	s	METAL 200 0.50% 1/16W
R1714	1-218-692-11	s	CHIP, METAL 1K 0.50% 1/16W

(VA-175A/175B/175P BOARD)

Ref. No. or Q'ty	Part No.	SP	Description
R1716	1-218-722-11	s	METAL, CHIP 18K 0.50% 1/16W
R1717	1-218-692-11	s	CHIP, METAL 1K 0.50% 1/16W
R1718	1-218-704-11	s	METAL 3.3K 0.50% 1/16W
R1719	1-218-722-11	s	METAL, CHIP 18K 0.50% 1/16W
R1720	1-218-703-11	s	METAL, CHIP 3K 0.50% 1/16W
R1721	1-218-675-11	s	METAL 200 0.50% 1/16W
R1722	1-218-692-11	s	CHIP, METAL 1K 0.50% 1/16W
R1724	1-218-747-11	s	METAL 200K 0.50% 1/16W [for CCU-550(J), CCU-550(UC)]
R1725	1-218-747-11	s	METAL 200K 0.50% 1/16W [for CCU-550(J), CCU-550(UC)]
R1726	1-218-719-11	s	METAL 13K 0.50% 1/16W [for CCU-550(J), CCU-550(UC)]
R1726	1-218-710-11	s	CHIP, METAL 5.6K 0.50% 1/16W [for CCU-550P(CE)]
R1727	1-218-698-11	s	METAL 1.8K 0.50% 1/16W [for CCU-550(J), CCU-550(UC)]
R1727	1-218-668-11	s	METAL 100 0.50% 1/16W [for CCU-550P(CE)]
R1728	1-218-744-11	s	METAL 150K 0.50% 1/16W
R1729	1-218-722-11	s	METAL, CHIP 18K 0.50% 1/16W [for CCU-550P(CE)]
R1730	1-218-714-11	s	METAL 8.2K 0.50% 1/16W [for CCU-550(J), CCU-550(UC)]
R1730	1-218-720-11	s	METAL 15K 0.50% 1/16W [for CCU-550P(CE)]
R1731	1-218-734-11	s	METAL, CHIP 56K 0.50% 1/16W
R1732	1-218-716-11	s	METAL 10K 0.50% 1/16W
R1733	1-218-668-11	s	METAL 100 0.50% 1/16W
R1734	1-218-732-11	s	METAL 47K 0.50% 1/16W
R1735	1-218-724-11	s	METAL 22K 0.50% 1/16W
R1736	1-218-716-11	s	METAL 10K 0.50% 1/16W
R1737	1-218-740-11	s	METAL 100K 0.50% 1/16W
R1738	1-218-732-11	s	METAL 47K 0.50% 1/16W
R1739	1-218-724-11	s	METAL 22K 0.50% 1/16W
R1740	1-218-694-11	s	CHIP, METAL 1.2K 0.50% 1/16W
R1741	1-218-700-11	s	METAL 2.2K 0.50% 1/16W
R1742	1-218-700-11	s	METAL 2.2K 0.50% 1/16W
R1743	1-218-696-11	s	METAL, CHIP 1.5K 0.50% 1/16W
R1744	1-218-692-11	s	CHIP, METAL 1K 0.50% 1/16W
R1745	1-218-709-11	s	METAL 5.1K 0.50% 1/16W
R1746	1-218-702-11	s	CHIP, METAL 2.7K 0.50% 1/16W
R1747	1-218-672-11	s	METAL 150 0.50% 1/16W [for CCU-550(J), CCU-550(UC)]
R1747	1-218-656-11	s	METAL 33 0.50% 1/16W [for CCU-550P(CE)]
R1748	1-218-744-11	s	METAL 150K 0.50% 1/16W
R1749	1-218-716-11	s	METAL 10K 0.50% 1/16W
R1750	1-218-722-11	s	METAL, CHIP 18K 0.50% 1/16W
R1751	1-218-732-11	s	METAL 47K 0.50% 1/16W
R1752	1-218-724-11	s	METAL 22K 0.50% 1/16W
R1753	1-218-716-11	s	METAL 10K 0.50% 1/16W
R1755	1-218-732-11	s	METAL 47K 0.50% 1/16W
R1756	1-218-724-11	s	METAL 22K 0.50% 1/16W
R1757	1-218-694-11	s	CHIP, METAL 1.2K 0.50% 1/16W
R1758	1-218-700-11	s	METAL 2.2K 0.50% 1/16W
R1759	1-218-700-11	s	METAL 2.2K 0.50% 1/16W
R1760	1-218-696-11	s	METAL, CHIP 1.5K 0.50% 1/16W
R1761	1-218-692-11	s	CHIP, METAL 1K 0.50% 1/16W
R1762	1-218-709-11	s	METAL 5.1K 0.50% 1/16W
R1763	1-218-702-11	s	CHIP, METAL 2.7K 0.50% 1/16W

(VA-175A/175B/175P BOARD)

Ref. No. or Q'ty	Part No.	SP	Description
R1764	1-218-670-11	s	METAL 120 0.50% 1/16W [for CCU-550(J), CCU-550(UC)]
R1764	1-218-656-11	s	METAL 33 0.50% 1/16W [for CCU-550P(CE)]
R1765	1-218-744-11	s	METAL 150K 0.50% 1/16W
R1766	1-218-716-11	s	METAL 10K 0.50% 1/16W
R1767	1-218-722-11	s	METAL, CHIP 18K 0.50% 1/16W
R1768	1-218-732-11	s	METAL 47K 0.50% 1/16W
R1769	1-218-724-11	s	METAL 22K 0.50% 1/16W
R1770	1-218-716-11	s	METAL 10K 0.50% 1/16W
R1801	1-218-668-11	s	METAL 100 0.50% 1/16W
R1802	1-218-740-11	s	METAL 100K 0.50% 1/16W
R1803	1-218-714-11	s	METAL 8.2K 0.50% 1/16W
R1804	1-218-716-11	s	METAL 10K 0.50% 1/16W
R1805	1-218-700-11	s	METAL 2.2K 0.50% 1/16W
R1806	1-218-716-11	s	METAL 10K 0.50% 1/16W
R1807	1-218-716-11	s	METAL 10K 0.50% 1/16W
R1808	1-218-696-11	s	METAL, CHIP 1.5K 0.50% 1/16W
R1809	1-218-732-11	s	METAL 47K 0.50% 1/16W
R1810	1-218-740-11	s	METAL 100K 0.50% 1/16W
R1811	1-218-716-11	s	METAL 10K 0.50% 1/16W
R1812	1-218-716-11	s	METAL 10K 0.50% 1/16W
R1813	1-218-740-11	s	METAL 100K 0.50% 1/16W
R1814	1-216-864-11	s	METAL, CHIP 0 5% 1/16W [for CCU-550(J), CCU-550(UC)]
R1815	1-216-864-11	s	METAL, CHIP 0 5% 1/16W [for CCU-550P(CE)]
R1816	1-218-740-11	s	METAL 100K 0.50% 1/16W
R1817	1-218-692-11	s	CHIP, METAL 1K 0.50% 1/16W
R1820	1-218-740-11	s	METAL 100K 0.50% 1/16W
R1821	1-218-692-11	s	CHIP, METAL 1K 0.50% 1/16W
R1822	1-218-740-11	s	METAL 100K 0.50% 1/16W
R1823	1-218-692-11	s	CHIP, METAL 1K 0.50% 1/16W
R1824	1-218-740-11	s	METAL 100K 0.50% 1/16W
R1825	1-218-692-11	s	CHIP, METAL 1K 0.50% 1/16W
R1826	1-218-692-11	s	CHIP, METAL 1K 0.50% 1/16W
R1835	1-218-692-11	s	CHIP, METAL 1K 0.50% 1/16W
R1836	1-218-692-11	s	CHIP, METAL 1K 0.50% 1/16W
R1837	1-218-692-11	s	CHIP, METAL 1K 0.50% 1/16W
R1838	1-218-692-11	s	CHIP, METAL 1K 0.50% 1/16W
R1839	1-218-692-11	s	CHIP, METAL 1K 0.50% 1/16W
R1840	1-218-692-11	s	CHIP, METAL 1K 0.50% 1/16W
R1841	1-218-692-11	s	CHIP, METAL 1K 0.50% 1/16W
R1842	1-218-692-11	s	CHIP, METAL 1K 0.50% 1/16W
R1843	1-218-692-11	s	CHIP, METAL 1K 0.50% 1/16W
R1844	1-218-692-11	s	CHIP, METAL 1K 0.50% 1/16W
R1845	1-218-692-11	s	CHIP, METAL 1K 0.50% 1/16W
R1846	1-218-692-11	s	CHIP, METAL 1K 0.50% 1/16W
R1847	1-216-864-11	s	METAL, CHIP 0 5% 1/16W
R1848	1-218-692-11	s	CHIP, METAL 1K 0.50% 1/16W
R1849	1-218-692-11	s	CHIP, METAL 1K 0.50% 1/16W
RB401	1-239-960-11	s	MATRIX RESISTOR
RB501	1-239-958-11	s	MATRIX RESISTOR
RB601	1-239-959-11	s	MATRIX RESISTOR
RB1101	1-239-961-11	s	MATRIX RESISTOR [for CCU-550(J), CCU-550(UC)]
RB1102	1-239-962-11	s	MATRIX RESISTOR [for CCU-550(J), CCU-550(UC)]
RB1701	1-239-024-11	s	MATRIX RESISTOR

(VA-175A/175B/175P BOARD)

Ref. No. or Q'ty	Part No.	SP	Description
RB1702	1-239-025-11	s	MATRIX RESISTOR
RB1703	1-239-026-11	s	MATRIX RESISTOR
RB1801	1-236-904-11	s	RES, NETWORK 1KX4
RB1802	1-236-904-11	s	RES, NETWORK 1KX4
RV101	1-237-038-11	s	RES, ADJ, METAL 50K
RV102	1-237-037-11	s	RES, ADJ, METAL 20K [for CCU-550(UC)]
RV103	1-237-034-11	s	RES, ADJ, METAL 2K
RV201	1-237-038-11	s	RES, ADJ, METAL 50K
RV202	1-237-038-11	s	RES, ADJ, METAL 50K
RV203	1-237-033-11	s	RES, ADJ, METAL 1K
RV204	1-237-034-11	s	RES, ADJ, METAL 2K
RV301	1-237-038-11	s	RES, ADJ, METAL 50K
RV302	1-237-038-11	s	RES, ADJ, METAL 50K
RV303	1-237-033-11	s	RES, ADJ, METAL 1K
RV304	1-237-034-11	s	RES, ADJ, METAL 2K
RV401	1-237-033-11	s	RES, ADJ, METAL 1K
RV402	1-237-034-11	s	RES, ADJ, METAL 2K
RV403	1-237-031-11	s	RES, ADJ, METAL 200
RV405	1-237-034-11	s	RES, ADJ, METAL 2K
RV406	1-237-032-11	s	RES, ADJ, METAL 500
RV407	1-237-040-11	s	RES, ADJ, METAL 200K
RV501	1-237-033-11	s	RES, ADJ, METAL 1K
RV502	1-237-034-11	s	RES, ADJ, METAL 2K
RV503	1-237-039-11	s	RES, ADJ, METAL 100K
RV505	1-237-032-11	s	RES, ADJ, METAL 500
RV601	1-237-033-11	s	RES, ADJ, METAL 1K
RV602	1-237-034-11	s	RES, ADJ, METAL 2K
RV603	1-237-039-11	s	RES, ADJ, METAL 100K
RV605	1-237-032-11	s	RES, ADJ, METAL 500
RV701	1-241-260-11	s	RES, ADJ, METALT 500
RV801	1-237-032-11	s	RES, ADJ, METAL 500
RV901	1-241-265-11	s	RES, ADJ, METALT 20K
RV902	1-241-264-11	s	RES, ADJ, METALT 10K
RV1001	1-237-036-11	s	RES, ADJ, METAL 10K
RV1002	1-237-035-11	s	RES, ADJ, METAL 5K
RV1003	1-241-260-11	s	RES, ADJ, METALT 500
RV1004	1-241-264-11	s	RES, ADJ, METALT 10K [for CCU-550(J), CCU-550(UC)]
RV1004	1-241-263-11	s	RES, ADJ, METALT 5K [for CCU-550P(CE)]
RV1101	1-237-034-11	s	RES, ADJ, METAL 2K [for CCU-550(J), CCU-550(UC)]
RV1101	1-237-035-11	s	RES, ADJ, METAL 5K [for CCU-550P(CE)]
RV1102	1-241-266-11	s	RES, ADJ, METAL 50K
RV1103	1-241-266-11	s	RES, ADJ, METAL 50K
RV1104	1-241-259-41	s	METAL, ADJ 200
RV1201	1-237-035-11	s	RES, ADJ, METAL 5K [for CCU-550(UC)]
RV1202	1-237-036-11	s	RES, ADJ, METAL 10K
RV1203	1-241-261-41	s	RES, ADJ, METAL 1K
RV1204	1-237-032-11	s	RES, ADJ, METAL 500
RV1401	1-237-036-11	s	RES, ADJ, METAL 10K
RV1402	1-237-036-11	s	RES, ADJ, METAL 10K
RV1501	1-237-036-11	s	RES, ADJ, METAL 10K
RV1502	1-237-037-11	s	RES, ADJ, METAL 20K
RV1601	1-225-314-11	s	RES, ADJ, METAL 10K
RV1602	1-225-314-11	s	RES, ADJ, METAL 10K
RV1604	1-237-033-11	s	RES, ADJ, METAL 1K

http://getMANUAL.com

(VA-175A/175B/175P BOARD)

Ref. No. or Q'ty	Part No.	SP	Description
RV1701	1-237-036-11	s	RES, ADJ, METAL 10K
RV1702	1-237-031-11	s	RES, ADJ, METAL 200
RV1703	1-237-031-11	s	RES, ADJ, METAL 200
RV1704	1-237-032-11	s	RES, ADJ, METAL 500 [for CCU-550(J), CCU-550(UC)]
S401	1-570-711-11	s	SWITCH, SLIDE
S901	1-570-711-11	s	SWITCH, SLIDE
S1101	1-571-304-11	s	SWITCH, CHIP
S1102	1-571-304-11	s	SWITCH, CHIP
S1201	1-571-304-11	s	SWITCH, CHIP
S1501	1-572-658-21	s	SWITCH, ROTARY
S1502	1-762-217-11	s	SWITCH, SLIDE [for CCU-550(J), CCU-550(UC)]
S1503	1-564-948-21	o	PIN, CONNECTOR 3P
S1601	1-762-118-21	s	SWITCH, TOGGLE
S1701	1-762-217-11	s	SWITCH, SLIDE
THP1	1-806-166-00	s	THERMISTOR (POSITIVE)

FRAME

Ref. No. or Q'ty	Part No.	SP	Description
	⚠ A-8312-596-A	s	POWER ASSY
	⚠(1-468-149-11)	s	SWITCHING REGULATOR
			COAXIAL CABLES
			(FROM CN7/MB-688 TO CN102)
	1-776-444-11	s	CABLE ASSEMBLY, COAXIAL
			(FROM CN6/MB-688 TO CN2/IO-136)
	1-776-444-11	s	CABLE ASSEMBLY, COAXIAL
			FLEXIBLE CARD WIRES
			(FROM CN12/MB-688 TO CN2/CN-1413)
	1-751-782-11	s	WIRE, FLEXIBLE CARD (16 CORE)
			(FROM CN10/MB-688 TO CN2/CN-1336)
	1-777-321-11	s	WIRE, FLEXIBLE CARD (25 CORE)
			(FROM CN13/MB-688 TO CN2/CN-1337)
	1-777-322-11	s	WIRE, FLEXIBLE CARD (8 CORE)
			(FROM CN15/MB-688 TO CN1/AU-236)
	1-777-336-11	s	CABLE, FLEXIBLE FLAT (30 CORE)
			HARNESS (AC IN)
	⚠ 9-939-519-01	o	HARNESS (AC IN)
			HARNESS (AU)
			(FROM CN3/AU-236 TO P4/POWER UNIT)
	9-939-520-01	o	HARNESS (AU)
			HARNESS (INCOM)
			(TO CN4/AU-236 BOARD)
1pc	1-569-200-11	o	HOUSING, 7P
7pcs	1-569-194-11	o	CONTACT
			HARNESS (MIC)
			(TO CN9/MB-688 BOARD)
1pc	1-580-582-11	o	HOUSING, 12P
12pcs	1-580-599-11	o	CONTACT, FEMALE AWG26-30
C1	1-163-275-11	s	CERAMIC, CHIP 0.01uF 5.0% 50V (CE)
C2	1-163-275-11	s	CERAMIC, CHIP 0.01uF 5.0% 50V (CE)
C3	1-163-275-11	s	CERAMIC, CHIP 0.01uF 5.0% 50V (CE)
C4	1-163-275-11	s	CERAMIC, CHIP 0.01uF 5.0% 50V (CE)
C5	1-163-275-11	s	CERAMIC, CHIP 0.01uF 5.0% 50V (CE)
			HARNESS (POWER SUPPLY)
1pc	1-956-309-12	s	HARNESS (POWER SUPPLY) (J) (UC)
1pc	1-956-309-21	s	HARNESS (POWER SUPPLY) (CE)
1pc	1-500-439-11	o	FERITE CORE (CE)
			(TO CN16/MB-688 BOARD)
1pc	1-580-582-11	o	HOUSING, 12P
9pcs	1-580-599-11	o	CONTACT, FEMALE AWG26-30
			(TO CN14/MB-688 BOARD)
1pc	1-580-591-11	o	HOUSING, 30P
24pc	1-573-176-11	o	CONTACT, FEMALE AWG22-30
			(TO J3/POWER UNIT)
1pc	1-580-596-11	s	HOUSING, 40P
24pcs	1-573-176-11	o	CONTACT, FEMALE AWG22-30
9pcs	1-580-599-11	o	CONTACT, FEMALE AWG26-30
			HARNESS (TRIAX-CE)
1pc	A-8312-936-A	o	TRIAX ASSY (F) (CE)
CN101	1-560-744-11	s	CONNECTOR, DOUBLE COAXIAL "CAMERA"
			(TO CN1/IO-136 BOARD)
3pcs	1-562-210-11	o	CONTACT, FEMALE AWG18-22
1pc	1-562-286-11	o	HOUSING, 5P
			HARNESS (TRIAX-J)
1pc	A-8312-935-A	o	TRIAX (T) (J)
CN101	1-565-798-12	s	CONNECTOR, COAXIAL "CAMERA"
			(TO CN1/IO-136 BOARD)
3pcs	1-562-210-11	o	CONTACT, FEMALE AWG18-22
1pc	1-562-286-11	o	HOUSING, 5P

(FRAME)

Ref. No. or Q'ty	Part No.	SP	Description
HARNESS (TRIAX-UC)			
1pc	A-8312-934-A	o	TRIAX (K) (UC)
CN101	1-565-796-11	s	CONNECTOR, DOUBLE COAXIAL"CAMERA"
(TO CN1/IO-136 BOARD)			
3pcs	1-562-210-11	o	CONTACT, FEMALE AWG18-22
1pc	1-562-286-11	o	HOUSING, 5P
HARNESS (VIDEO)			
(TO CN17/CN-1335 BOARD)			
1pc	1-580-579-11	o	HOUSING, 6P
3pcs	1-573-176-11	o	CONTACT, FEMALE AWG22-30
3pcs	1-580-599-11	o	CONTACT, FEMALE AWG26-30
(TO CN18/CN-1335 BOARD)			
1pc	1-580-589-11	o	HOUSING, 26P
13pcs	1-573-176-11	o	CONTACT, FEMALE AWG22-30
9pcs	1-580-599-11	o	CONTACT, FEMALE AWG26-30
(TO CN8/MB-688 BOARD)			
1pc	1-580-582-11	o	HOUSING, 12P
3pcs	1-573-176-11	o	CONTACT, FEMALE AWG22-30
3pcs	1-580-599-11	o	CONTACT, FEMALE AWG26-30
(TO CN11/MB-688 BOARD)			
1pc	1-580-591-11	o	HOUSING, 30P
13pcs	1-573-176-11	o	CONTACT, FEMALE AWG22-30
9pcs	1-580-599-11	o	CONTACT, FEMALE AWG26-30
HARNESS(WF)			
(TO CN19/CN-1335 BOARD)			
1pc	1-569-197-11	o	HOUSING, 4P
4pcs	1-569-194-21	o	CONTACT, FEMALE, AWG24-30
CN101	1-560-744-11	s	CONNECTOR, DOUBLE COAXIAL "CAMERA"(CE)
	1-565-798-12	s	CONNECTOR, COAXIAL "CAMERA" (J)
	1-565-796-11	s	CONNECTOR, DOUBLE COAXIAL "CAMERA"(UC)
CN102	1-774-157-11	s	CONVERTER, COAXIAL CONNECTOR "COAX"
CN103	1-778-341-11	s	CONNECTOR, XLR 3P, MALE (UC,CE)
	1-778-342-11	s	CONNECTOR, XLR 3P, FEMALE (J)
CN104	1-778-341-11	s	CONNECTOR, XLR 3P, MALE (UC,CE)
	1-778-342-11	s	CONNECTOR, XLR 3P, FEMALE (J)
CN105	1-561-376-00	s	CONNECTOR 4P, FEMALE "WF MODE"
CN106	1-750-881-11	s	CONVERTER, COAXIAL CONNECTOR, BNC "SERIAL OUTOUT"
CN107	1-778-343-11	o	CONNECTOR, XLR 5P, FEMALE "INCOM/PGM"

1-3. Supplief Accessories

Ref. No. or Q'ty	Part No.	SP	Description
1pc	A-8278-054-A	o	REMOTE INDICATOR ASSY
1pc	⚠ 1-551-812-11	s	CORD, POWER(UC)
1pc	1-560-155-00	s	CONNECTOR, 4P, MALE
1pc	⚠ 1-575-181-11	s	CORD SET, POWER(J)
1pc	⚠ 1-590-910-11	s	CORD SET, POWER(CE)
1pc	⚠ 1-750-686-11	s	CONNECTOR, CONVERSION(3P-2P)(J)
1pc	2-990-242-01	s	HOLDER (B), PLUG(J,UC)
1pc	3-170-078-01	s	HOLDER (B), PLUG(CE)

1-4. Optional Fixture

Ref. No. or Q'ty	Part No.	SP	Description
	A-8277-639-A	o	EXTENSION BOARD, EX-534

1-5. Changed Parts

NOTE: The numbers identified by marking with) are
matching with each serial numbers.
See the table matched with each serial numbers.

604) Serial No. 10101 to 10200 [for CCU-550(UC)]
Serial No. 30101 to 30200 [for CCU-550(J)]
Serial No. 40101 to 40200 [for CCU-550P(CE)]
605) Serial No. 10201 to 10300 [for CCU-550(UC)]
Serial No. 30201 to 30300 [for CCU-550(J)]
Serial No. 40201 to 40300 [for CCU-550P(CE)]
607) Serial No. 10301 to 10400 [for CCU-550(UC)]
Serial No. 30301 to 30400 [for CCU-550(J)]
Serial No. 40301 to 40400 [for CCU-550P(CE)]
609) Serial No. 15001 and higher [for CCU-550(UC)]
Serial No. 35001 and higher [for CCU-550(J)]
Serial No. 45001 and higher [for CCU-550P(CE)]

AT-111 BOARD
---

609) 2pcs	NOT IN USE.	--->	8-759-456-07 o IC 28F010-CCU550-V2.01
609) C417	NOT IN USE.	--->	1-163-017-00 s CERAMIC, CHIP 0.0047uF 5% 50V
609) C418	NOT IN USE.	--->	1-163-017-00 s CERAMIC, CHIP 0.0047uF 5% 50V
609) D105	8-719-046-02 s DIODE MA742-TX	--->	8-719-059-59 s DIODE MA3J74200LSO
609) D106	8-719-046-02 s DIODE MA742-TX	--->	8-719-059-59 s DIODE MA3J74200LSO
609) D107	8-719-046-02 s DIODE MA742-TX	--->	8-719-059-59 s DIODE MA3J74200LSO
609) IC105	8-759-031-84 s IC SC7S04F	--->	8-759-058-58 s IC TC7S04FU(TE85R)
609) IC108	8-759-242-76 s IC TC7W08F	--->	8-759-082-58 s IC TC7W08FU
609) IC129	8-759-031-84 s IC SC7S04F	--->	8-759-058-58 s IC TC7S04FU(TE85R)
609) IC130	8-759-031-84 s IC SC7S04F	--->	8-759-058-58 s IC TC7S04FU(TE85R)
609) IC143	8-759-031-84 s IC SC7S04F	--->	8-759-058-58 s IC TC7S04FU(TE85R)
609) IC145	8-759-242-76 s IC TC7W08F	--->	8-759-058-62 s IC TC7S08FU(TE85R)
609) PH101	8-749-924-62 s PNOTO COUPLER PC410	--->	8-749-013-27 s IC HCPL-M600-500
609) PH102	8-749-924-62 s PNOTO COUPLER PC410	--->	8-749-013-27 s IC HCPL-M600-500
607) R158	NOT IN USE.	--->	1-216-295-00 s METAL, CHIP 0 1/10W
607) R159	NOT IN USE.	--->	1-216-295-00 s METAL, CHIP 0 1/10W
607) R160	NOT IN USE.	--->	1-216-295-00 s METAL, CHIP 0 1/10W
609) R163	NOT IN USE.	--->	1-216-295-00 s METAL, CHIP 0 1/10W

AU-231 BOARD
---

609) 1pc	3-697-757-02 o PANEL,AU	--->	3-697-757-03 o PANEL,AU

AU-236 BOARD
---

604) 10pcs	4-937-336-21 o HOLDER, LED	--->	8pcs
604) 2pcs	NOT IN USE.	--->	4-937-336-11 s HOLDER, LED
607) D9	8-719-053-87 s DIODE SLR-332VC-T32	--->	8-719-053-78 s DIODE SLR-332VC3F
607) D10	8-719-053-87 s DIODE SLR-332VC-T32	--->	8-719-053-78 s DIODE SLR-332VC3F

CN-1335 BOARD
---

609) 1pc	3-697-753-01 o BNC PANEL	--->	3-697-753-02 o BNC PANEL

DM-110 BOARD
---

609) 1pc	3-697-758-02 o PANEL,DM	--->	3-697-758-03 o PANEL,DM

VA-175A175/B175/P BOARD
---

609) 1pc	3-697-756-02 o PANEL,VA	--->	3-697-756-03 o PANEL,VA	
607) IC1101	8-759-184-24 s IC TA78DS09F(TE12L)	--->	8-759-078-45 s IC NJM78L09VA(TE1)	
604) JC501	1-216-864-11 s METAL, CHIP 0 5% 1/16W	--->	DELETED.	(J,UC)
604) JC1501	NOT IN USE.	--->	1-216-864-11 s METAL, CHIP 0 5% 1/16W	(J,UC)
604) R152	1-218-883-11 s METAL 33K 0.50% 1/16W	--->	1-218-728-11 s METAL 33K 0.50% 1/16W	(UC)
604) R236	1-218-867-11 s CHIP, METAL 6.8K 0.50% 1/16W	--->	1-218-712-11 s METAL 6.8K 0.50% 1/16W	
604) R336	1-218-867-11 s CHIP, METAL 6.8K 0.50% 1/16W	--->	1-218-712-11 s METAL 6.8K 0.50% 1/16W	
605) R425	1-218-870-11 s CHIP, METAL 9.1K 0.50% 1/16W	--->	1-218-712-11 s METAL 6.8K 0.50% 1/16W	(J,UC)
605) R519	1-218-699-11 s CHIP, METAL 2K 0.50% 1/16W	--->	1-218-698-11 s METAL 1.8K 0.50% 1/16W	(J,UC)
604) R523	1-218-846-11 s CHIP, METAL 910 0.50% 1/16W	--->	1-218-691-11 s METAL, CHIP 910 0.50% 1/16W	(UC)
604) R550	1-218-845-11 s CHIP, METAL 820 0.50% 1/16W	--->	1-218-690-11 s METAL, CHIP 820 0.50% 1/16W	(J,UC)
605) R625	1-218-699-11 s CHIP, METAL 2K 0.50% 1/16W	--->	1-218-698-11 s METAL 1.8K 0.50% 1/16W	(J,UC)
604) R629	1-218-846-11 s CHIP, METAL 910 0.50% 1/16W	--->	1-218-691-11 s METAL, CHIP 910 0.50% 1/16W	(UC)
604) R650	1-218-845-11 s CHIP, METAL 820 0.50% 1/16W	--->	1-218-690-11 s METAL, CHIP 820 0.50% 1/16W	(J,UC)
605) R900	1-218-901-11 s CHIP, METAL 180K 0.50% 1/16W	--->	1-218-740-11 s METAL 100K 0.50% 1/16W	(J,UC)
607) R1338	NOT IN USE.	--->	1-218-704-11 s METAL 3.3K 0.50% 1/16W	
604) R1444	1-218-692-11 s CHIP, METAL 1K 0.50% 1/16W	--->	1-218-700-11 s METAL 2.2K 0.50% 1/16W	(J,UC)
604) R1444	1-218-700-11 s METAL 2.2K 0.50% 1/16W	--->	DELETED.	(CE)
604) R1728	1-218-899-11 s CHIP, METAL 150K 0.50% 1/16W	--->	1-218-744-11 s METAL 150K 0.50% 1/16W	

Section 2
Semiconductor Pin Assignments

ここに記載されている半導体は，それぞれの機能を等価的に表したものです。　なお，互換性のない型名を併記していることがありますので，部品を交換するときは，Spare Partsの章を参照してください。
等価回路はＩＣメーカーのデータブックに従いました。

Semiconductors of which functions are equivalent are described here. For parts replacement, refer to the section of Spare Parts in this manual. The circuit diagram of each IC is obtained from the IC data book published by the manufacturer.

DIODE **PAGE**

1S1555TP 2-3
1SS119-25 2-3
1SS300-TE85L 2-3
1SS301-TE85L 2-3
1SS302 2-3
1SS302-TE85L 2-3
1SS313-TE85L 2-3
1SV172-TE85L 2-3
1T363 2-3
1T363A-M20-T8A 2-3

EA30QS04-F 2-3

HLMP-6300-010 2-3
HSM88AS 2-3
HSM88AS-TL 2-3

KV1470 2-3
KV1470TL00 2-3

MA141WK 2-3
MA742-TX 2-3

PS2604L 2-3

RD10UJN-T1 2-3
RD12UJN-T1 2-3
RD2.0UH-T1 2-3
RD3.3UH(1)-T1 2-3
RD3.3UH-T1 2-3
RD3.9UH-T1 2-3
RD4.7UH-T1 2-3
RD5.1M-T1B 2-3
RD5.6UJN-T1 2-3

SLR-332MGF03 2-3
SLR-332VC-T32 2-3
SPR-356MUW5F 2-3

UZM5.1B 2-3

TRANSISTOR **PAGE**

2SA1162-G 2-3
2SA1162G-TE85L 2-3
2SA1213Y-TE12L 2-3
2SA1610-T1Y34 2-3
2SA1610-Y33 2-3
2SA1611-M6 2-3
2SA1611-T1M7 2-3
2SA1688-5-TL 2-3
2SA1808-PT106 2-3
2SB798-DL 2-3
2SC2873Y-TE12L 2-3
2SC4177-L6 2-3
2SC4177-T1L5L6 2-3
2SC4184-T1T43 2-3
2SC4215-Y(TE85L) 2-3
2SD1623-S 2-3
2SD596DV345 2-3
2SD596T1-DV345 2-3
2SK508-K51 2-3
2SK508-T1K52 2-3
2SK508-T1K53 2-3
2SK620 2-3
2SK620-TX 2-3
2SK852-T1X4 2-3
2SK852-X4 2-3

DTA144EUA-T106 2-4
DTC144EUA-T106 2-4

FMP1 2-4
FMP1-T-148 2-4

XP6401 2-4
XP6401-TXE 2-4
XP6435-TX 2-4
XP6534 2-4
XP6534-TX 2-4

IC **PAGE**

CLC505AJE 2-4
CLC505AJE-T 2-4
CX-7968A 2-4
CX-7969 2-6
CX22017 2-5
CXA1122AM-3 2-7
CXA1122AM-3-T4 2-7
CXA1432M 2-5
CXA1432M-T4 2-5
CXD1216M 2-6
CXD1216M-TH 2-6
CXD1217Q 2-8
CXD8072Q 2-8
CXD8344AQ 2-10
CXK581000ATM-70LL 2-10
CXK581000ATM-70LL-TL
..... 2-10

HD14053BFP 2-11
HD6435328RE49F 2-12
HN58C257T 2-11

LA1235 2-12
LM1881M 2-12
LM1881M-FL63 2-12
LM2903PS 2-11
LM2903PS-E05 2-11
LM339NS 2-12
LM339NS-E20 2-12
LM393PS 2-11
LM393PS-E05 2-11
LM4040BIM3-5.0 2-14
LM4040BIM3X-5.0 2-14

IC **PAGE**

M51348AFP 2-14
M51348AFP-E1 2-14
M5207L01 2-14
M62021FP 2-14
M62352GP 2-15
M62352GP-75ED 2-15
MB88351PFV 2-15
MB88351PFV-ER 2-15
MC14001BF 2-14
MC14001BFEL 2-14
MC14011BF 2-14
MC14011BFEL 2-14
MC14020BFEL 2-16
MC14050BF 2-15
MC14050BFEL 2-15
MC14053BF-T2 2-11
MC14520BF 2-17
MC14520BFEL 2-17
MC14528BF 2-16
MC14528BFEL 2-16
MC14538BFE 2-25
MC14538BFEL 2-25
MC1495M 2-16
MC74HC163AF 2-16
MC74HC4051F 2-17
MC74HC4051FEL 2-17
MSM82C55A-2GS 2-17
MSM82C55A-2GS-VK 2-17

NJM1496V-TE2 2-17
NJM3414AM-TE2 2-18
NJM4558M-TE2 2-18
NJM4560M 2-18
NJM4560M-TE2 2-18
NJM567M 2-18
NJM78L09UA(TE1) 2-18

PC410 2-18
PC410T 2-18

IC	PAGE
SC7S04F	2-18
SC7S32F	2-18
SN74HC00ANS	2-19
SN74HC00ANS-E05	2-19
SN74HC00APW-E05	2-19
SN74HC00APW-E20	2-19
SN74HC02ANS	2-19
SN74HC02ANS-E05	2-19
SN74HC02APW-E05	2-19
SN74HC04ANS	2-19
SN74HC04ANS-E05	2-19
SN74HC04APW-E05	2-19
SN74HC04APW-E20	2-19
SN74HC08ANS	2-19
SN74HC08ANS-E05	2-19
SN74HC08APW-E05	2-19
SN74HC132ANS	2-19
SN74HC132ANS-E05	2-19
SN74HC138ANS	2-19
SN74HC153ANS	2-20
SN74HC153ANS-E05	2-20
SN74HC158ANS	2-20
SN74HC158ANS-E05	2-20
SN74HC163ANS-E05	2-16
SN74HC165ANS	2-21
SN74HC165ANS-E05	2-21
SN74HC165APW-E05	2-21
SN74HC32ANS	2-20
SN74HC32ANS-E05	2-20
SN74HC541ANS	2-20
SN74HC541ANS-E05	2-20
SN74HC86ANS-E05	2-22
SN74LS123NS	2-21
SN74LS123NS-E05	2-21
SN74LS221NS-E05	2-20
SN75158PS	2-21
SN75158PS-E05	2-21

IC	PAGE
TA78DS05F	2-18
TA78DS05F(TE12L)	2-18
TA8129Z	2-21
TC4S30F	2-21
TC4S30F(TE85R)	2-21
TC4S69F	2-18
TC4S69F(TE85R)	2-18
TC4W53FU	2-22
TC4W53FU(TE12R)	2-22
TC74HC221AF	2-22
TC74HC221AF(EL)	2-22
TC74HC4053AFS	2-22
TC74HC4053AFS-EL	2-22
TC74HC86AF	2-22
TC7S04F(TE85R)	2-18
TC7S04FU(TE85R)	2-18
TC7S08FU(TE85R)	2-22
TC7S32F(TE85R)	2-18
TC7S66FU	2-22
TC7S66FU(TE85R)	2-22
TC7S86FU	2-21
TC7S86FU(TE85R)	2-21
TC7W00FU	2-22
TC7W00FU(TE12R)	2-22
TC7W02F	2-23
TC7W02FU(TE12R)	2-23
TC7W04FU(TE12R)	2-23
TC7W08F	2-23
TC7W08F(TE12R)	2-23
TC7W08FU	2-23
TC7W08FU(TE12R)	2-23
TC7W74FU	2-23
TC7W74FU(TE12R)	2-23
TL062CPW	2-23
TL062CPW-E05	2-23
TL064CPW	2-23
TL064CPW-E05	2-23
TL082CPW-E05	2-23
TL084CPW-E05	2-23
TL084CPW-E20	2-23
TL1451ACNS	2-23
TL1451ACNS-E05	2-23
TLC272CPW-E05	2-23
TLC274CPW	2-24
TLC274CPW-E05	2-24

IC	PAGE
UPA101G	2-24
UPA101G-E2	2-24
UPC311G2	2-24
UPC311G2-E2	2-24
UPC319G2	2-24
UPC4558G2	2-18
UPD4701AGT	2-25
UPD6453GT-610	2-26
UPD6453GT-610-E2	2-26

DIODE

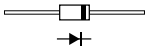

1SS119-25 (HITACHI)
1S1555TP

-TOP VIEW-

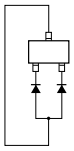

1SS300-TE85L
1SS313-TE85L

-TOP VIEW-

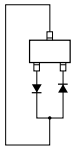

1SS302
1SV172-TE85L
HSM88AS
MA742-TX
1SS302-TE85L
HSM88AS-TL

-TOP VIEW-

1T363
1T363A-M20-T8A

-TOP VIEW-

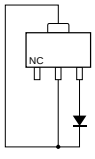

EA30QS04-F

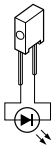

HLMP-6300-010 ;RED

-TOP VIEW-

KV1470
KV1470TL00

-TOP VIEW-

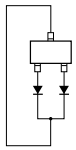

MA141WK
1SS301-TE85L

-TOP VIEW-

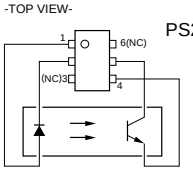

PS2604L

-TOP VIEW-

RD10UJN-T1
RD12UJN-T1
RD2.0UH-T1
RD3.3UH(1)-T1
RD3.9UH-T1
RD4.7UH-T1
RD5.6UJN-T1
RD3.3UH-T1

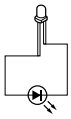

SLR-332MGF03 ;GREEN
SLR-332VC-T32 ;RED

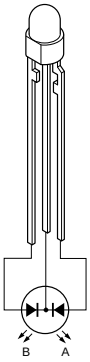

SPR-356MUW5F
;A=RED,B=GREEN

A : RED
B : GREEN

-TOP VIEW-

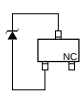

UZM5.1B
RD5.1M-T1B

TRANSISTOR

-TOP VIEW-

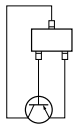

2SA1162-G
2SA1610-Y33
2SA1611-M6
2SA1688-5-TL
2SA1808-PT106
2SA1162G-TE85L
2SA1610-T1Y34
2SA1611-T1M7

-TOP VIEW-

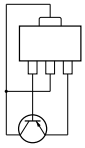

2SB798-DL
2SA1213Y-TE12L

-TOP VIEW-

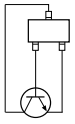

2SC4177-L6
2SC4184-T1T43
2SC4215-Y(TE85L)
2SD596DV345
2SC4177-T1L5L6
2SD596T1-DV345

-TOP VIEW-

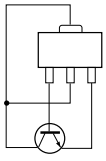

2SD1623-S
2SC2873Y-TE12L

-TOP VIEW-

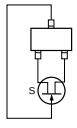

2SK508-K51
2SK508-T1K53
2SK852-X4
2SK508-T1K52
2SK852-T1X4

-TOP VIEW-

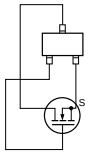

2SK620
2SK620-TX

TRANSISTOR

-TOP VIEW-

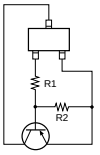

DTA144EUA-T106

-TOP VIEW-

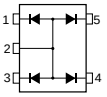

FMP1
FMP1-T-148

-TOP VIEW-

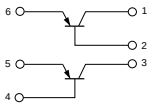

XP6401
XP6401-TXE

-TOP VIEW-

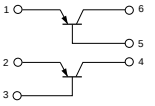

XP6435-TX

-TOP VIEW-

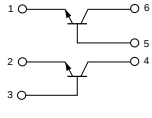

XP6534
XP6534-TX

-TOP VIEW-

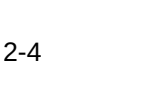

IC

CLC505AJE (COMLINEAR)FLAT PACKAGE
CLC505AJE-T

OPERATIONAL AMPLIFIER
— TOP VIEW —

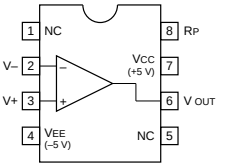

CX-7968A (FUJITSU)FLAT PACKAGE

C-MOS COLOR BAR GENERATOR
-TOP VIEW-

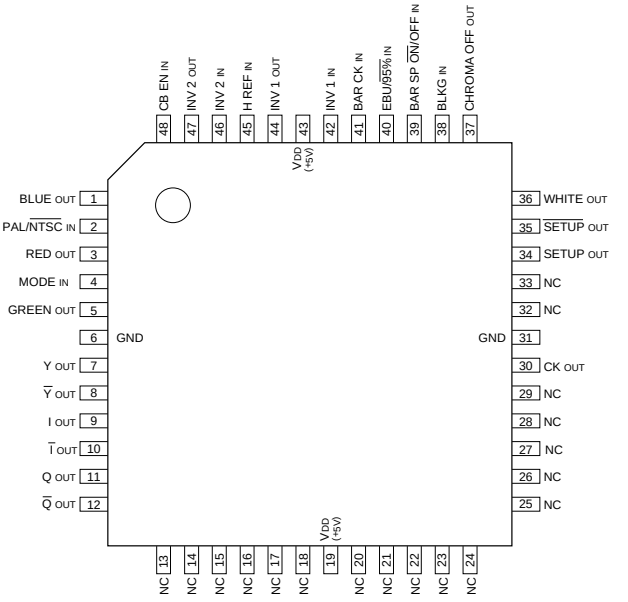

INPUT				FUNCTION
PAL/NTSC	MODE	EBU/95%	BAR SP	
0	0	0	0	EIAJ COLOR BAR
0	0	0	1	FULL FIELD COLOR BAR
0	0	1	0	INHIBIT
0	0	1	1	INHIBIT
0	1	0	0	EIAJ COLOR BAR
0	1	0	1	FULL FIELD COLOR BAR
0	1	1	0	SMPTE COLOR BAR
0	1	1	1	COLOR BAR + Y BAR
1	0	0	0	95% COLOR BAR
1	0	0	1	INHIBIT
1	0	1	0	EBU COLOR BAR
1	0	1	1	INHIBIT
1	1	0	0	95% COLOR BAR
1	1	0	1	COLOR BAR + Y BAR
1	1	1	0	EBU COLOR BAR
1	1	1	1	INHIBIT

0 ; LOW LEVEL
1 ; HIGH LEVEL

○ COLOR BAR PATTERN

EIAJ COLOR BAR (NTSC)

GRAY	YELLOW	CYAN	GREEN	MAGENTA	RED	BLUE
– I	WHITE	+ Q	BLACK			

COLOR BAR + Y BAR (PAL) or (NTSC)

WHITE	YELLOW	CYAN	GREEN	MAGENTA	RED	BLUE	BLACK
WHITE	GRAY	GRAY	GRAY	GRAY	GRAY	GRAY	BLACK

FULL FIELD COLOR BAR (NTSC)

GRAY	YELLOW	CYAN	GREEN	MAGENTA	RED	BLUE

95% COLOR BAR (PAL)

WHITE	YELLOW	CYAN	GREEN	MAGENTA	RED	BLUE	BLACK

SMPTE COLOR BAR (NTSC)

GRAY	YELLOW	CYAN	GREEN	MAGENTA	RED	BLUE
BLUE	BLACK	MAGENTA	BLACK	CYAN	BLACK	GRAY
– I	WHITE	+ Q	BLACK		+ 6 BLACK BLACK + 4 BLACK	BLACK

EBU COLOR BAR (PAL)

WHITE	YELLOW	CYAN	GREEN	MAGENTA	RED	BLUE	BLACK

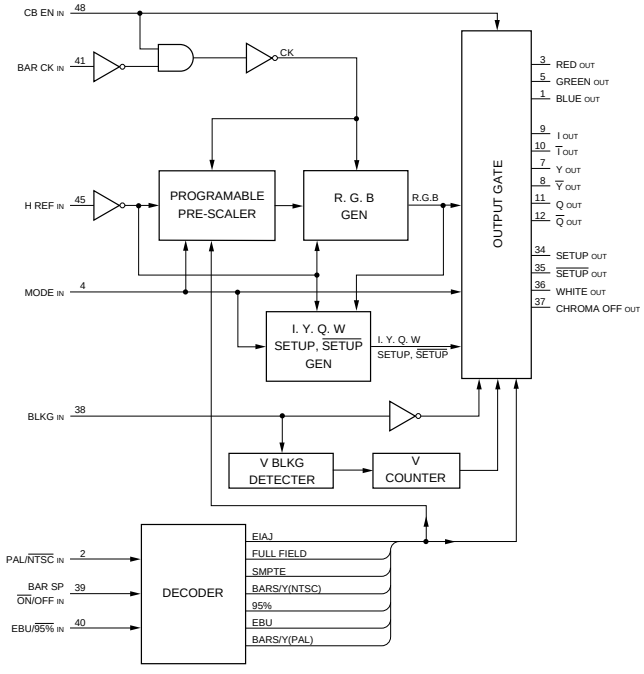

CX22017 (SONY)

VIDEO SIGNAL PROCESSOR
-TOP VIEW-

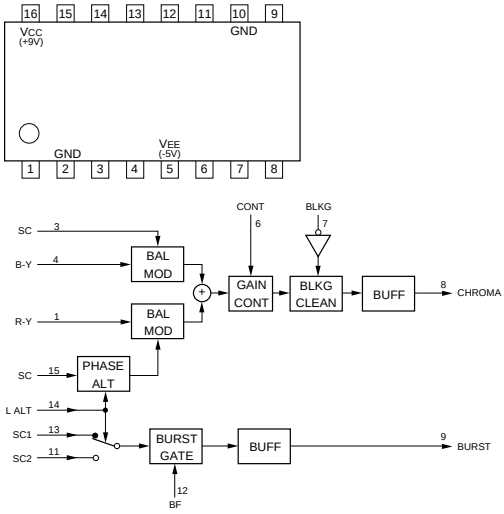

CXA1432M (SONY)FLAT PACKAGE
CXA1432M-T4

VIDEO SIGNAL CLAMPER
— TOP VIEW —

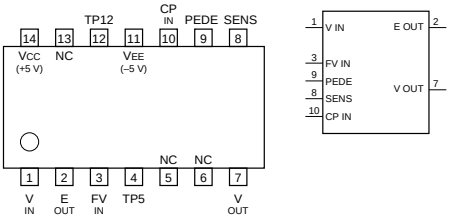

CP IN	; CLAMP PULSE INPUT
E OUT	; BUFFER AMP OUTPUT
FV IN	; FLOATING VIDEO SIGNAL INPUT
PEDE	; CLAMP LEVEL DC INPUT
SENS	; CLAMP POINT SIGNAL INPUT
TP5, TP12	; FOR TEST
V IN	; VIDEO SIGNAL INPUT
V OUT	; VIDEO SIGNAL OUTPUT

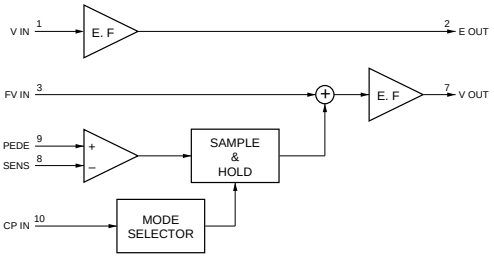

CXD1216M (SONY)FLAT PACKAGE
CXD1216M-TH

C-MOS GENLOCK DRIVER
-TOP VIEW-

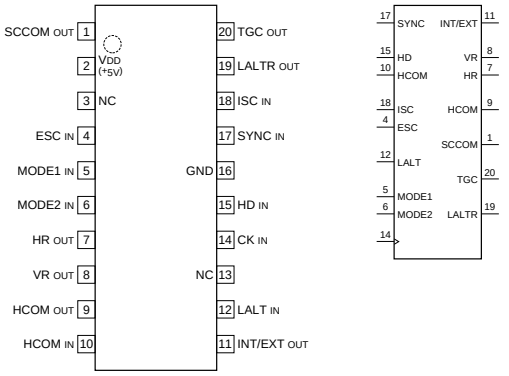

INPUT		MODE	SYSTEM
MODE1	MODE2		
0	0	M1	PAL-VBS
1	0	M2	PALM-VBS
0	1	M3	PAL,SECAM-VS/SC/LALT
1	1	M4	NTSC-VBS,NTSC-VS/SC PALM-VS/SC/LALT

0 ; LOW LEVEL
1 ; HIGH LEVEL

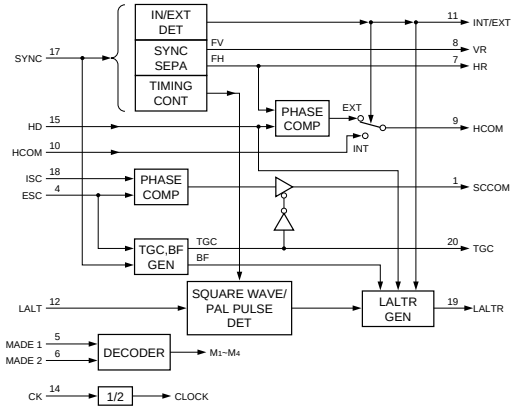

INPUT
CK ; 4fsc CLOCK INPUT
ESC ; SC/COLOR BURST
HCOM ; PHASE COMPARATE FROM CXD1217
HD ; H DRIVE FROM CXD1217
ISC ; SUBCARRIER FROM CXD1217
LALT ; LALT FROM REFERENCE SIGNAL GENERATOR
MODE1,2 ; SYSTEM SELECT
SYNC ; SYNC FROM REFERENCE SIGNAL GENERATOR

OUTPUT
HCOM ; PHASE COMPARATOR HR WITH HD
HR ; fH OF SYNC SEPARATE
INT/EXT ; INTERNAL/EXTERNAL SPECIFIED
LALTR ; LINE CHANGE RESET
SCCOM ; PHASE COMPARATOR ESC WITH ISC
TGC ; TRISTATE CONTROL
VR ; fv OF SYNC SEPARATE

CX-7969 (SONY)FLAT PACKAGE

C-MOS PULSE GENERATOR
-TOP VIEW-

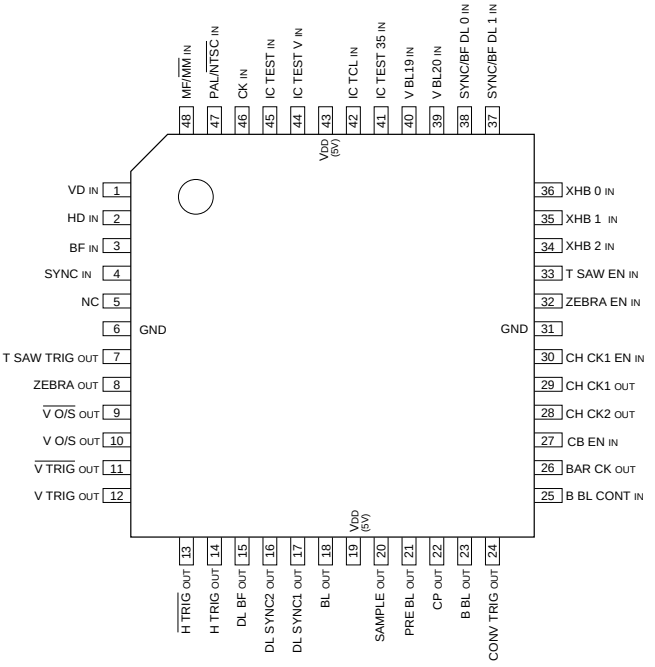

1. SYSTEM DESIGNATION

INPUT	SYSTEM
PAL/$\overline{\text{NTSC}}$ IN	
1	PAL, SECAM
0	NTSC, PALM

2. TYPE OF TUBE

INPUT	FUNCTION
MF/$\overline{\text{MM}}$ IN	
1	MAG-STA TUBE
0	MAG-MAG TUBE

3. V BLKG WIDTH (NTSC ONLY)

INPUT		V BLKG WIDTH
V BL 19	V BL 20	
1	X	19H
0	1	20H
0	0	21H

4. H BLKG WIDTH

INPUT			BLKG WIDTH (μS)	
XHB2	XHB1	XHB0	NTSC	PAL
1	1	1	10.27	11.49
1	1	0	10.34	11.56
1	0	1	10.41	11.63
1	0	0	10.48	11.70
0	1	1	10.55	11.77
0	1	0	10.62	11.84
0	0	1	10.69	11.91
0	0	0	10.76	11.98

5. DELAY TIME

INPUT		DELAY TIME (nS)		
SYNC/BF DL1	SYNC/BF DL2	DL SYNC 1	DL SYNC 2	DL BF
1	1	140	210	140
1	0	210	280	210
0	1	630	700	630
0	0	700	770	700

1 ; HIGH LEVEL
0 ; LOW LEVEL
X ; DON'T CARE

http://getMANUAL.com

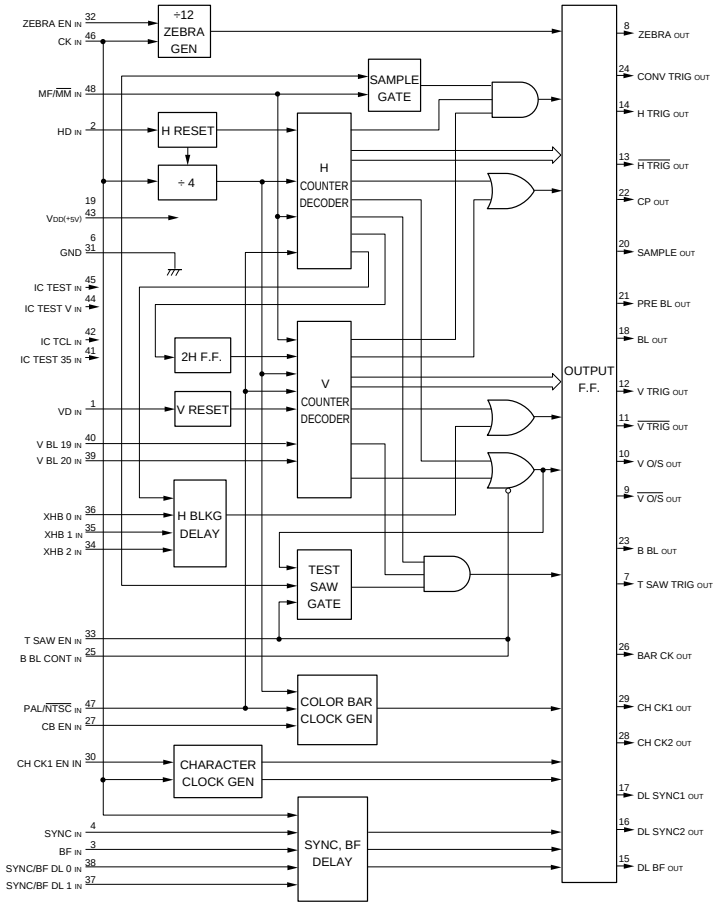

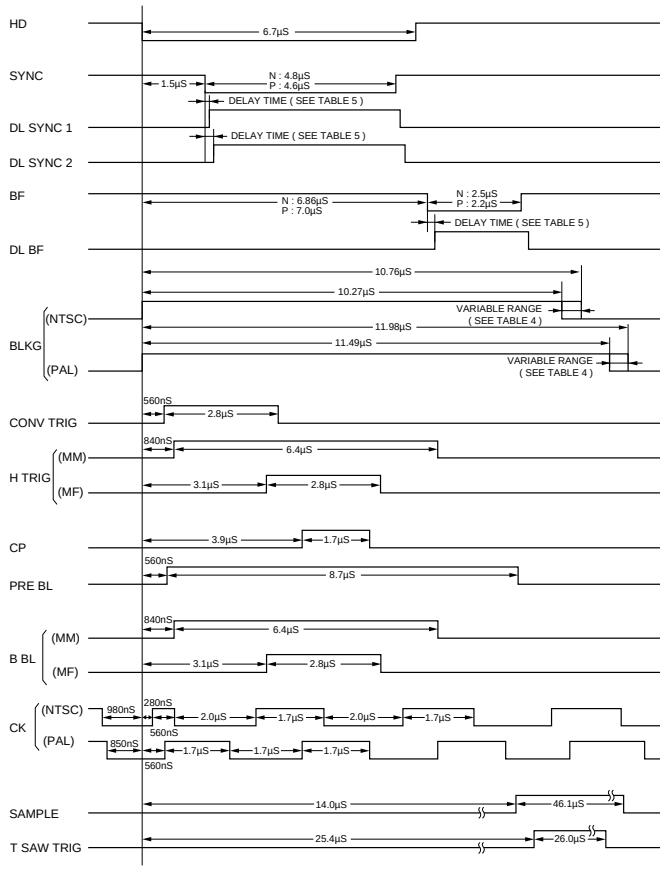

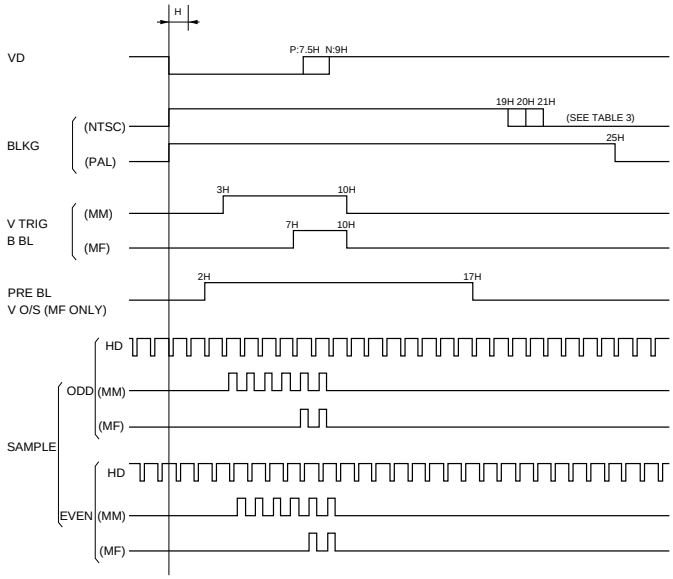

CXA1122AM-3 (SONY)FLAT PACKAGE
CXA1122AM-3 -T4

RF MODULATOR

-TOP VIEW-

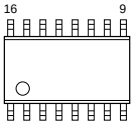

INPUT

4.5MHz TANK	;	FOR AUDIO TANK COIL CONNECTING
AUDIO	;	AUDIO SIGNAL
CARRIER OFF SW	;	CARRIER CONTROL DC
CH SW	;	CHANNEL SELECT
MOD ADJ	;	MODULATION ADJUST
P/S ADJ	;	PICTURE / SOUND RATIO ADJUST
SAW	;	SURFACE ACOUSTIC WAVE
VIDEO	;	VIDEO SIGNAL

OUTPUT

ANT SW CONT	;	ANTENNA SWITCH CONTROL DC
REG	;	REGULATOR
RF	;	RF
SAW OUT 1,2	;	SURFACE ACOUSTIC WAVE

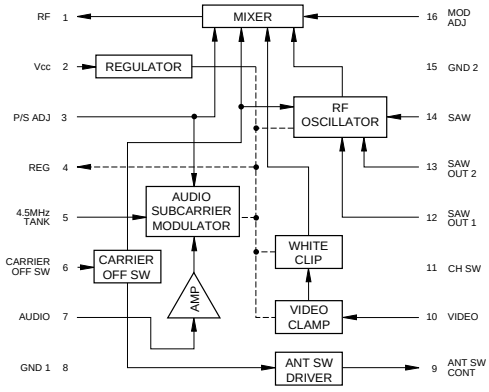

CXD8072Q (SONY)FLAT PACKAGE

C-MOS SERIAL TO PARALLEL CONVERTER

-TOP VIEW-

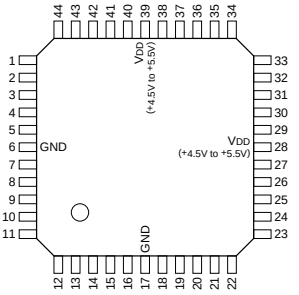

(VDD = +4.5V to +5.5V)

PIN NO.	I/O	SYMBOL	PIN NO.	I/O	SYMBOL	PIN NO.	I/O	SYMBOL	PIN NO.	I/O	SYMBOL
1	I	MODE	12	O	O09	23	O	O19	34	O	O29
2	O	O00	13	O	O10	24	O	O20	35	O	O30
3	O	O01	14	O	O11	25	O	O21	36	O	O31
4	O	O02	15	O	O12	26	O	O22	37	O	O32
5	O	O03	16	O	O13	27	O	O23	38	O	O33
6	–	GND	17	–	GND	28	–	VDD	39	–	VDD
7	O	O04	18	O	O14	29	O	O24	40	O	O34
8	O	O05	19	O	O15	30	O	O25	41	O	O35
9	O	O06	20	O	O16	31	O	O26	42	I	SEDA
10	O	O07	21	O	O17	32	O	O27	43	I	LD
11	O	O08	22	O	O18	33	O	O28	44	I	SOCK

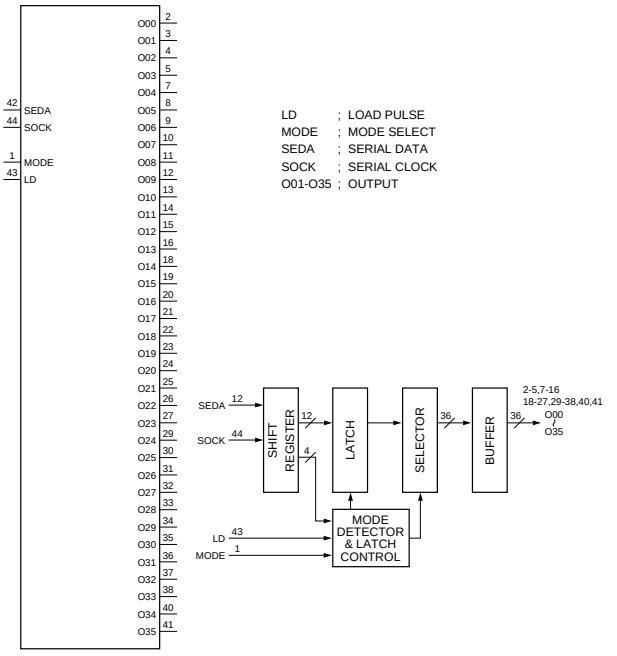

LD ; LOAD PULSE
MODE ; MODE SELECT
SEDA ; SERIAL DATA
SOCK ; SERIAL CLOCK
O01-O35 ; OUTPUT

CXD1217Q (SONY)FLAT PACKAGE

C-MOS SYNC GENERATOR

-TOP VIEW-

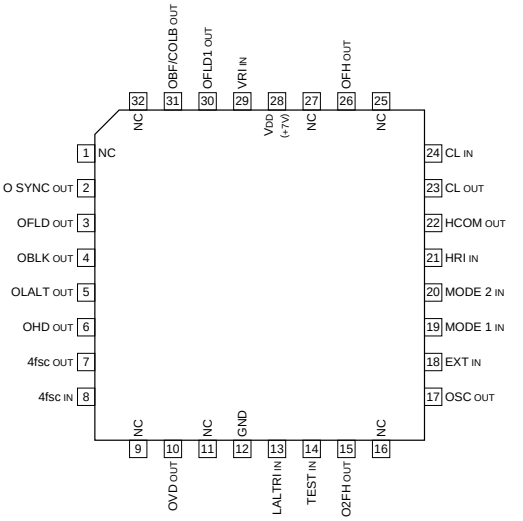

SYSTEM	4fsc	CLOCK
NTSC	910fH	910fH
PAL	1135fH + 2fv	908fH
PALM	909fH	910fH
SECAM	—	908fH

INPUT		SYSTEM
MODE1	MODE2	
0	0	NTSC
0	1	SECAM
1	0	PALM
1	1	PAL

0 ; LOW LEVEL
1 ; HIGH LEVEL

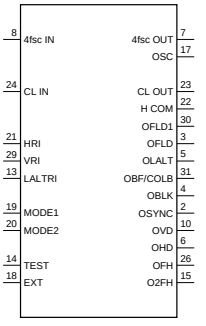

INPUT

4fsc IN ; 4fsc
CL IN ; CLOCK
EXT ; SYNC MODE SELECT (L : INTERNAL/H : EXTERNAL)
HRI ; HORIZONTAL RESET
LALTRI ; LINE ALTERNATE RESET
MODE1, 2 ; SYSTEM SELECT
VRI ; VERTICAL RESET

OUTPUT

4fsc OUT ; 4fsc
CL OUT ; CLOCK
HCOM ; PHASE COMPARATOR
O2FH ; 2fH
OBF/COLB ; BURST FLAG/COLOR BLANKING
OBLK ; COMPOSITE BLANKING
OFH ; fH
OFLD ; FIELD PULSE
OFLD1 ; FIELD1
OHD ; HORIZONTAL DRIVE
OLALT ; LINE ALTERNATE
OSC ; SUBCARRIER
OSYNC ; COMPOSITE SYNC
OVD ; VERTICAL DRIVE

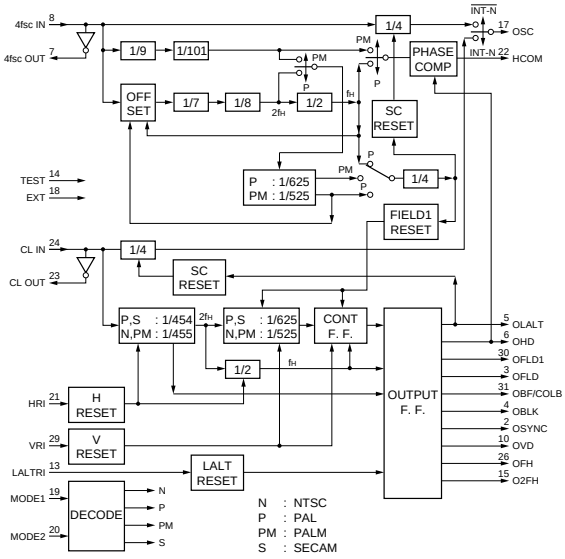

(NTSC, PALM)

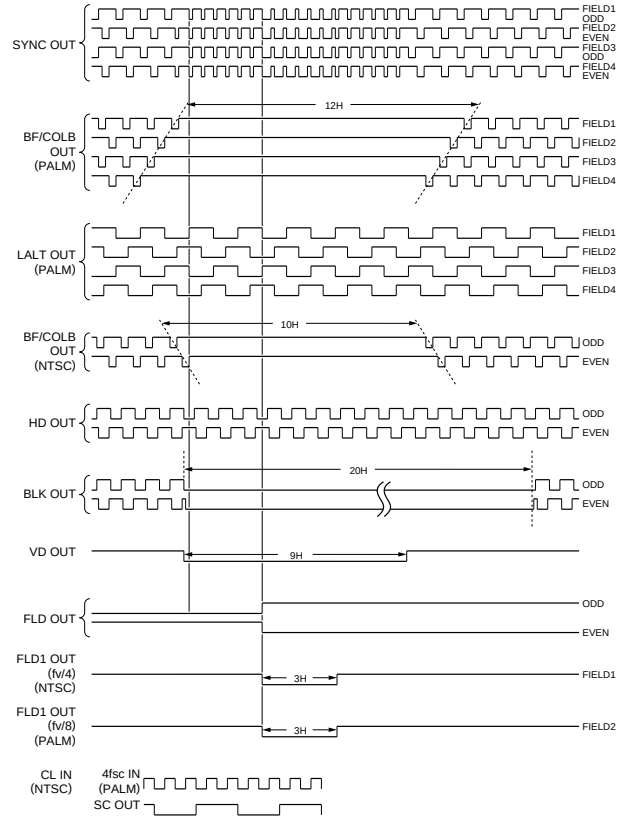

(PAL, SECAM)

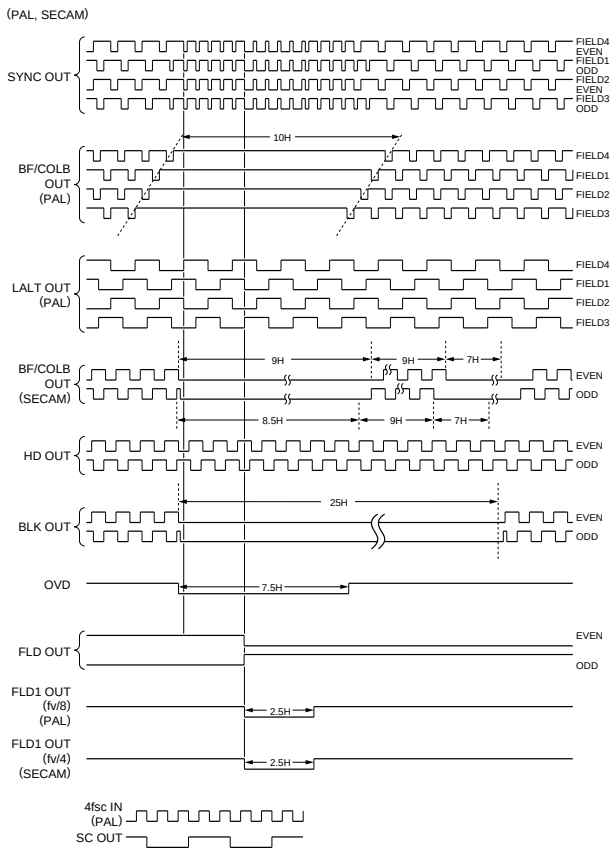

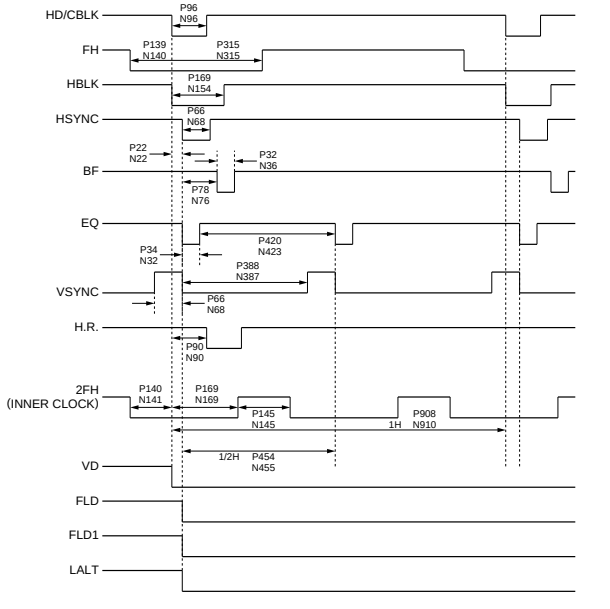

P : PAL, SECAM
N : NTSC, PALM

CXD8344AQ (SONY)

C-MOS PULSE GENERATOR

- TOP VIEW -

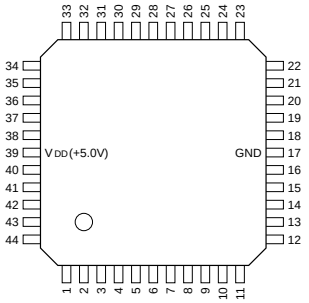

(VDD =+5.0V)

PIN No.	I/O	SIGNAL	PIN No.	I/O	SIGNAL	PIN No.	I/O	SIGNAL	PIN No.	I/O	SIGNAL
1	I	I01	12	I	I11	23	I	TEST	34	O	OT10
2	I	I02	13	I	I12	24	O	OT00	35	O	OT11
3	I	I03	14	I	I13	25	O	OT01	36	O	OT12
4	I	I04	15	I	I14	26	O	OT02	37	O	OT13
5	I	I05	16	I	I15	27	O	OT03	38	O	OT14
6	I	I06	17	–	GND	28	O	OT04	39	–	VDD
7	I	I07	18	I	A19	29	O	OT05	40	O	OT15
8	I	I08	19	I	I17	30	O	OT06	41	I	CLK
9	I	MODE	20	I	RST	31	O	OT07	42	O	OT16
10	I	I09	21	I	CKH	32	O	OT08	43	O	RAM
11	I	I10	22	I	TES2	33	O	OT09	44	O	ROM

INPUT

A19 ; ADDRESS INPUT
CKH ; FOR TEST
CLK ; CLOCK
I01–I17 ; INPUT
MODE ; MODE SELECT (H:WINDOW GEN / L:CHIP SELECT LOGIC)
RST ; RESET
TES2 ; FOR TEST
TEST ; FOR TEST

OUTPUT

OT00-OT16 ; OUTPUT
RAM ; RAM OUT
ROM ; ROM OUT

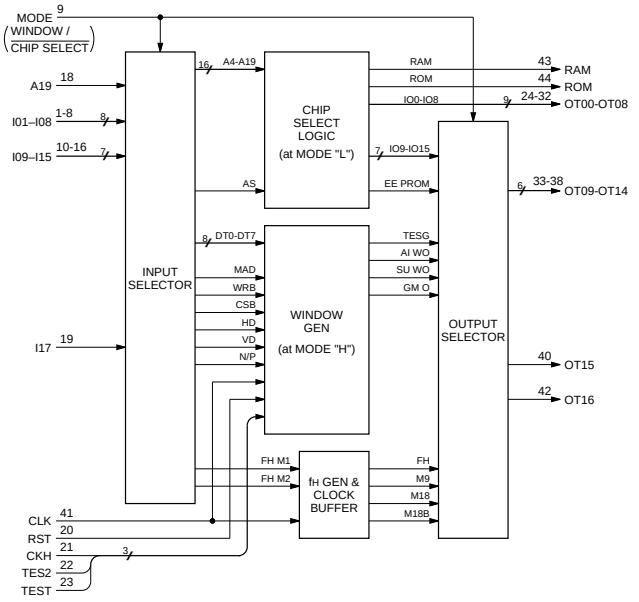

CXK581000ATM-70LL (SONY)
CXK581000ATM-70LL-TL

C-MOS 1M(131.072×8)BIT STATIC RAM

-TOP VIEW-

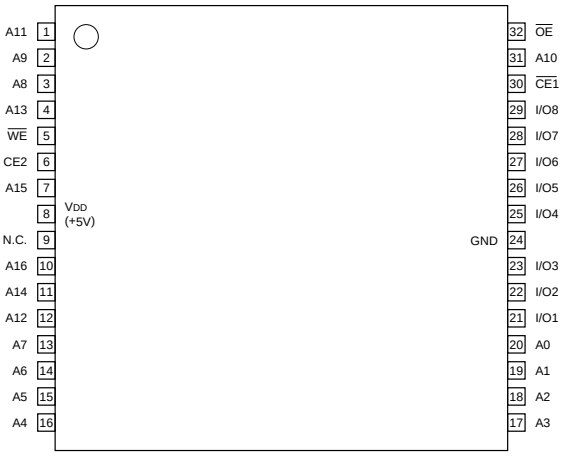

A0~A16 : ADDRESS INPUTS
I/O1~I/O8 : DATA INPUTS/OUTPUTS
CE1,CE2 : CHIP ENABLE1,2 INPUTS
WE : WRITE ENABLE INPUT
OE : OUTPUT ENABLE INPUT

CE1	CE2	OE	WE	MODE	I/O TERMINAL
1	X	X	X	NOT SELECT	HIGH IMPEDANCE
X	0	X	X	NOT SELECT	HIGH IMPEDANCE
0	1	1	1	OUTPUT DISABLE	HIGH IMPEDANCE
0	1	0	1	READ	OUTPUT DATA
0	1	X	0	WRITE	INPUT DATA

0 : LOW LEVEL
1 : HIGH LEVEL
X : DON'T CARE

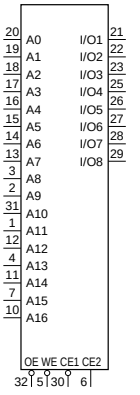

HN58C257T (HITACHI)FLAT PACKAGE

32K(32768×8)-BIT EEPROM

-TOP VIEW-

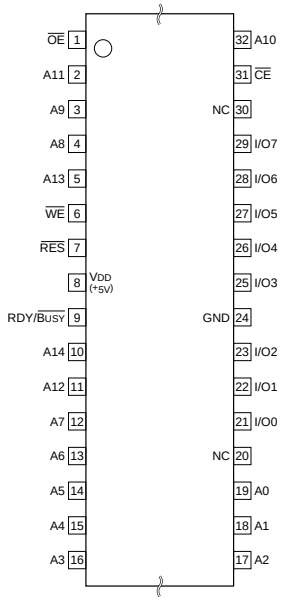

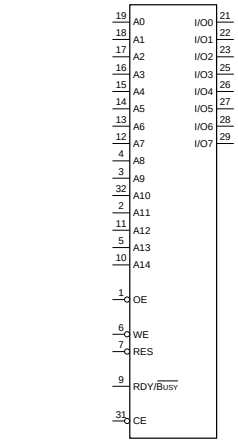

A0-A14 ; ADDRESS INPUT
I/O0-I/O7 ; DATA INPUT/OUTPUT
$\overline{CE}$; CHIP ENABLE INPUT
$\overline{OE}$; OUTPUT ENABLE INPUT
RDY/$\overline{BUSY}$; REDY/BUSY INPUT
$\overline{RES}$; RESET INPUT
$\overline{WE}$; WRITE ENABLE INPUT

MODE \ PIN	$\overline{CE}$	$\overline{OE}$	$\overline{WE}$	RDY/$\overline{BUSY}$	$\overline{RES}$	I/O
READ	0	0	1	HIGH Z	1	DOUT
STANDBY	1	X	X	HIGH Z	X	HIGH Z
WRITE	0	1	0	HIGH Z→VOL	1	DIN
DESELECT	0	1	1	HIGH Z	1	HIGH Z
WRITE INHIBIT	X	X	1	HIGH Z	X	–
WRITE INHIBIT	X	0	X	HIGH Z	X	–
$\overline{DATA}$ POLLING	0	0	1	VOL	1	DATA OUT
PROGRAM RESET	X	X	X	HIGH Z	0	HIGH Z

0 ; LOW LEVEL
1 ; HIGH LEVEL
X ; DON'T CARE
HI-Z ; HIGH IMPEDANCE

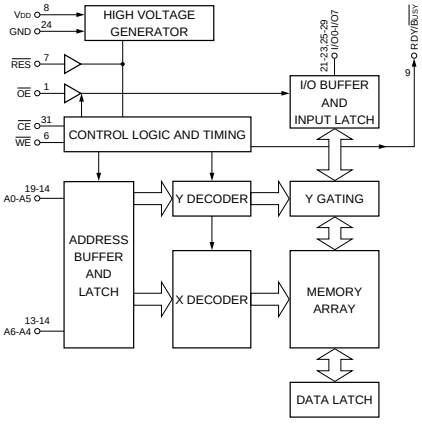

HD14053BFP (HITACHI)FLAT PACKAGE
MC14053BF-T2

C-MOS TRIPLE 2-CHANNEL ANALOG MULTIPLEXERS/DEMULTIPLEXERS

— TOP VIEW —

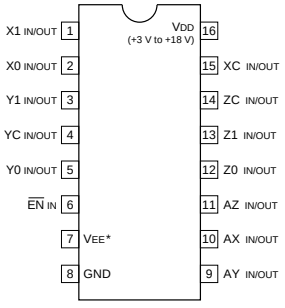

VEE*; VDD – VEE + 3 V + 18 V

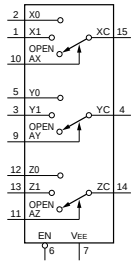

0 ; LOW LEVEL
1 ; HIGH LEVEL
X ; DON'T CARE

CONT. INPUTS		ON
EN	A (X, Y, Z)	CHANNEL
0	0	0
0	1	1
1	X	OPEN

LM2903PS (TI)FLAT PACKAGE
LM393PS (TI)FLAT PACKAGE
LM2903PS-E05
LM393PS-E05

DUAL VOLTAGE COMPARATORS

—TOP VIEW—

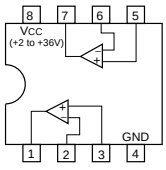

LA1235 (SANYO)

FM IF DEMODULATOR

-TOP VIEW-

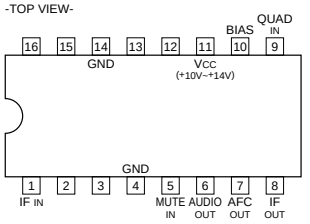

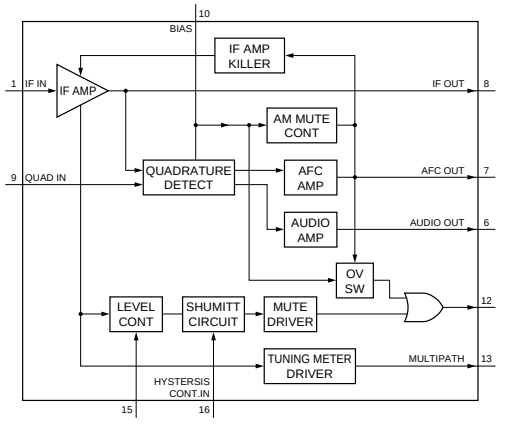

LM1881M (NS)FLAT PACKAGE
LM1881M-FL63

VIDEO SYNC SEPARATOR

—TOP VIEW—

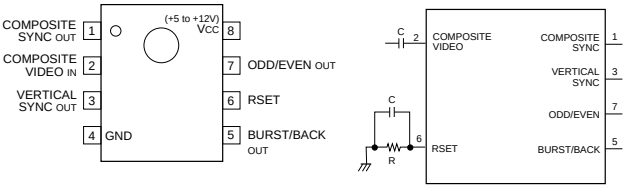

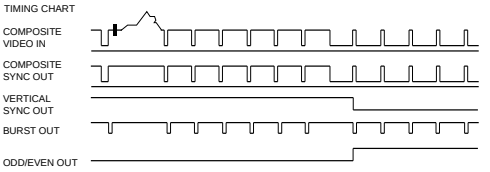

LM339NS (TI)FLAT PACKAGE
LM339NS-E20

QUAD COMPARATORS

—TOP VIEW—

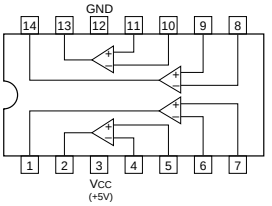

HD6435328RE49F (HITACHI)FLAT PACKAGE

C-MOS 8-BIT 1-CHIP MICRO COMPUTER

–TOP VIEW–

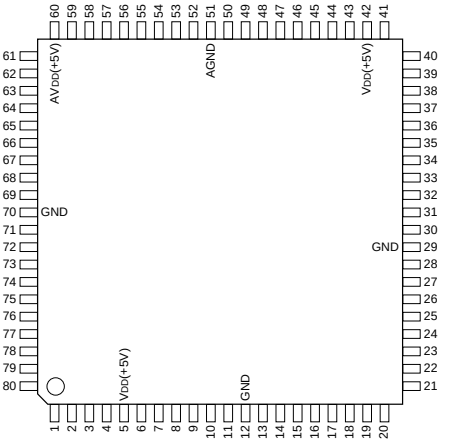

PIN NO.	I/O	SIGNAL	PIN NO.	I/O	SIGNAL
1	I/O	P2 1 /R/$\overline{W}$	41	I/O	P6 3 /A 19
2	I/O	P2 2 /$\overline{DS}$	42	–	VDD
3	I/O	P2 3 /$\overline{RD}$	43	I/O	P7 0 /TMCI
4	I/O	P2 4 /$\overline{WR}$	44	I/O	P7 1 /FTI 1
5	–	VDD	45	I/O	P7 2 /FTI 2
6	I	MD 0	46	I/O	P7 3 /FTI 3 /TMRI
7	I	MD 1	47	I/O	P7 4 /FTOB 1 /FTCI 1
8	I	MD 2	48	I/O	P7 5 /FTOB 2 /FTCI 2
9	I	$\overline{STBY}$	49	I/O	P7 6 /FTOB 3 /FTCI 3
10	I	$\overline{RES}$	50	I/O	P7 7 /FTOA 1
11	I	NMI	51	–	AGND
12	–	GND	52	I	P8 0 /AN 0
13	I/O	P3 0 /D 0	53	I	P8 1 /AN 1
14	I/O	P3 1 /D 1	54	I	P8 2 /AN 2
15	I/O	P3 2 /D 2	55	I	P8 3 /AN 3
16	I/O	P3 3 /D 3	56	I	P8 4 /AN 4
17	I/O	P3 4 /D 4	57	I	P8 5 /AN 5
18	I/O	P3 5 /D 5	58	I	P8 6 /AN 6
19	I/O	P3 6 /D 6	59	I	P8 7 /AN 7
20	I/O	P3 7 /D 7	60	–	AVDD
21	I/O	P4 0 /A 0	61	I/O	P9 0 /FTOA 2
22	I/O	P4 1 /A 1	62	I/O	P9 1 /FTOA 3
23	I/O	P4 2 /A 2	63	I/O	P9 2 /PW 1
24	I/O	P4 3 /A 3	64	I/O	P9 3 /PW 2
25	I/O	P4 4 /A 4	65	I/O	P9 4 /PW 3
26	I/O	P4 5 /A 5	66	I/O	P9 5 /TXD
27	I/O	P4 6 /A 6	67	I/O	P9 6 /RXD
28	I/O	P4 7 /A 7	68	I/O	P9 7 /SCK
29	–	GND	69	I	EXTAL
30	I/O	P5 0 /A 8	70	I	XTAL
31	I/O	P5 1 /A 9	71	–	GND
32	I/O	P5 2 /A 10	72	I/O	P1 0 /Ø
33	I/O	P5 3 /A 11	73	I/O	P1 1 /E
34	I/O	P5 4 /A 12	74	I/O	P1 2 /$\overline{BACK}$
35	I/O	P5 5 /A 13	75	I/O	P1 3 /$\overline{BREQ}$
36	I/O	P5 6 /A 14	76	I/O	P1 4 /$\overline{WAIT}$
37	I/O	P5 7 /A 15	77	I/O	P1 5 /$\overline{IRQ}$ 0
38	I/O	P6 0 /A 16	78	I/O	P1 6 /$\overline{IRQ}$ 1
39	I/O	P6 1 /A 17	79	I/O	P1 7 /TMO
40	I/O	P6 2 /A 18	80	I/O	P2 0 /$\overline{AS}$

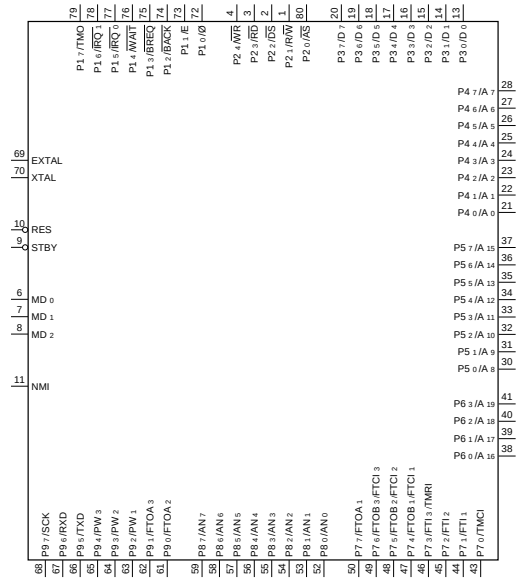

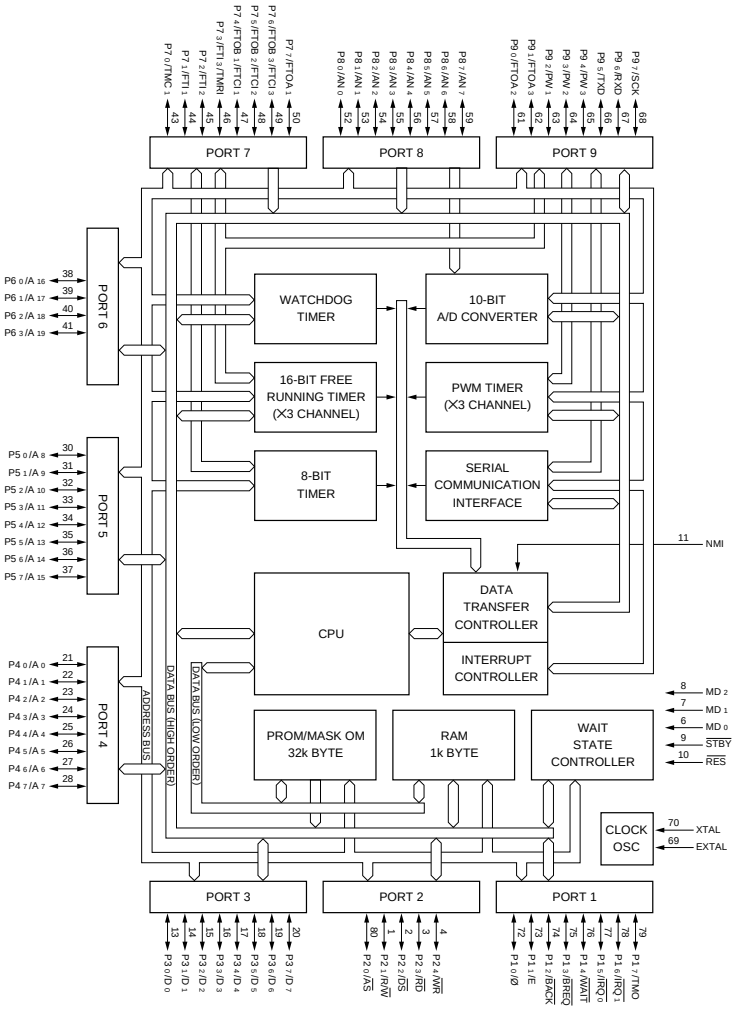

INPUT

AN 0 – AN 7	; ANALOG DATA
BREQ	; BUS REQUEST
EXTAL	; CONNECTED TO CRYSTAL OSCILLATOR
FTCI 1 – FTCI 3	; FRT COUNTER CLOCK (CHANNEL 1 TO 3)
FTI 1 – FTI 3	; FRT INPUT CAPTURE (CHANNEL 1 TO 3)
IRQ 0 – IRQ 2	; INTERRUPTION REQUEST 0 AND 2
MD 0 – MD 2	; MODE SETTING
NMI	; NON MASKABLE INTERRUPTION
P8 0 – P8 7	; PORT 8
$\overline{RES}$	; RESET
RXD	; RECEIVE DATA
$\overline{STBY}$	; STANDBY
TMCI	; 8-BIT TIMER CLOCK
TMRI	; 8-BIT TIMER COUNTER RESET
WAIT	; WAIT
XTAL	; CONNECTED TO CRYSTAL OSCILLATOR

OUTPUT

A 0 – A 19	; ADDRESS BUS
$\overline{AS}$	; ADDRESS STROBE
BACK	; BUS REQUEST ACKNOWLEDGE
$\overline{DS}$	; DATA STROBE
E	; ENABLE CLOCK
FTOA 1 – FTOA 3	; FTR OUTPUT COMPARE A (CHANNEL 1 TO 3)
FTOB 1 – FTOB 3	; FTR OUTPUT COMPARE B (CHANNEL 1 TO 3)
PW 1 – PW 3	; PWM TIMER (CHANNEL 1 TO 3)
R/$\overline{W}$	; READ/WRITE
$\overline{RD}$	; READ
TMO	; 8-BIT TIMER
TXD	; SEND DATA
$\overline{WR}$	; WRITE
Ø	; SYSTEM CLOCK

INPUT/OUTPUT

D 0 – D 7	; DATA BUS
P1 0 – P1 7	; PORT 1
P2 0 – P2 4	; PORT 2
P3 0 – P3 7	; PORT 3
P4 0 – P4 7	; PORT 4
P5 0 – P5 7	; PORT 5
P6 0 – P6 3	; PORT 6
P7 0 – P7 7	; PORT 7
P9 0 – P9 7	; PORT 9
SCK	; SERIAL CLOCK

LM4040BIM3-5.0 (NS)
LM4040BIM3X-5.0

PRECISION MICROPOWER SHUNT VOLTAGE REFERENCE
— TOP VIEW —

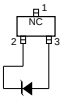

M62021FP (MITSUBISHI)FLAT PACKAGE

SELECTION SW BUILT-IN SYSTEM RESET
— TOP VIEW —

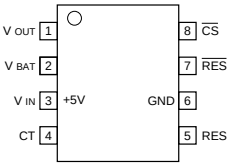

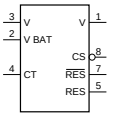

CS ; CHIP SELECT OUTPUT
CT ; DELAY CAPACITY INPUT
RES ; RESET OUTPUT
VBAT ; VIDEO SIGNAL BACKUP INPUT
VIN ; VIDEO SIGNAL INPUT
VOUT ; VIDEO SIGNAL OUTPUT

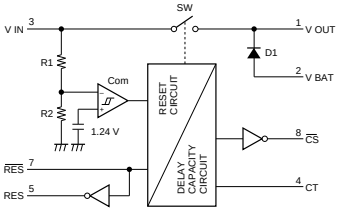

MC14001BF (MOTOROLA)FLAT PACKAGE
MC14001BFEL

C-MOS 2-INPUT NOR GATE
-TOP VIEW-

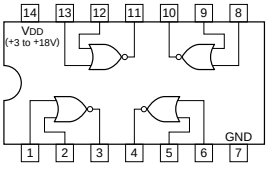

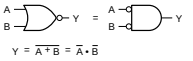

A	B	Y
0	0	1
0	1	0
1	0	0
1	1	0

0 ; LOW LEVEL
1 ; HIGH LEVEL

MC14011BF (MOTOROLA)FLAT PACKAGE
MC14011BFEL

C-MOS 2-INPUT NAND GATE
-TOP VIEW-

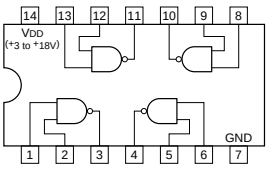

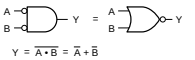

A	B	Y
0	0	1
0	1	1
1	0	1
1	1	0

0 ; LOW LEVEL
1 ; HIGH LEVEL

M51348AFP (MITSUBISHI)FLAT PACKAGE
M51348AFP-E1

POCKET TV IF SYSTEM
-TOP VIEW-

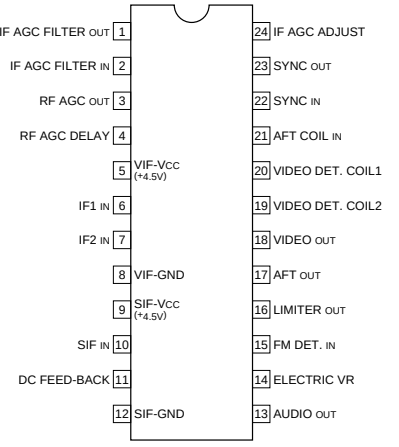

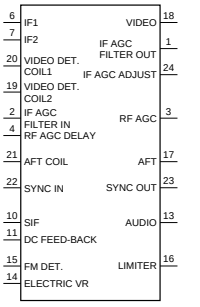

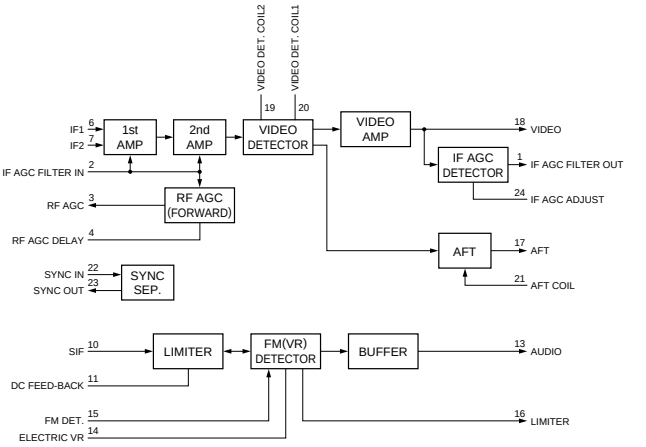

M5207L01 (MITSUBISHI)

LINEAR CONTROL DUAL VOLTAGE CONTROLLED AMP
-SIDE VIEW-

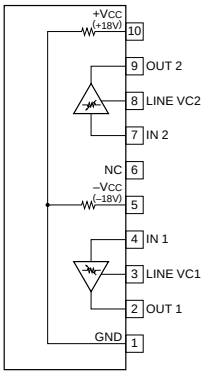

M62352GP (MITSUBISHI)FLAT PACKAGE
M62352GP-75ED

C-MOS 8-BITx12 CHANNEL D/A CONVERTER
(WITH BUFFER OPERATIONAL AMPLIFIER)
— TOP VIEW —

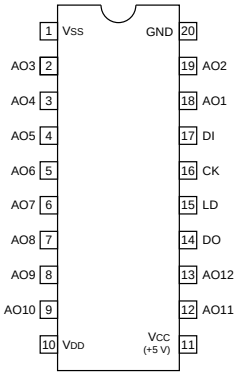

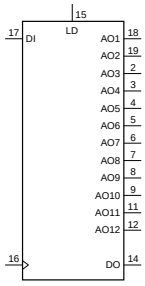

AO1-AO12 ; 8-BIT D/A OUTPUTS
CK ; CLOCK INPUT
DI ; SERIAL DATA INPUT
DO ; DATA OUTPUT

NOTE:
3.5 V < V_{DD} < V_{CC}
–3.5 V < V_{SS} < V_{CC}

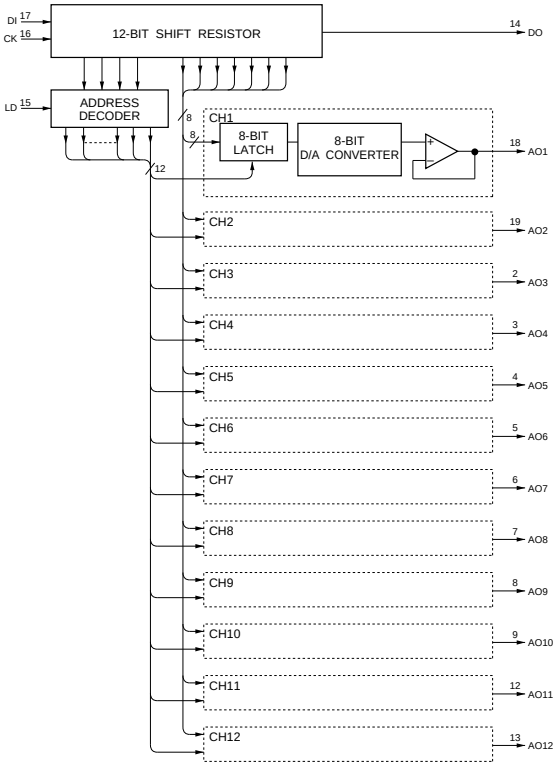

MB88351PFV (FUJITSU)FLAT PACKAGE
MB88351PFV-ER

C-MOS 12-BIT D / A CONVERTER WITH OPERATIONAL AMPLIFIER
-TOP VIEW-

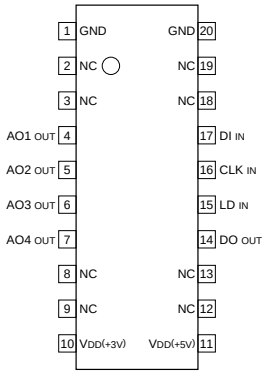

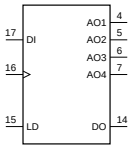

INPUT
CLK ; CHIFT CLOCK
DI ; SERIAL DATA
LD ; DECODER AND D/A REGISTER TO LOAD

OUTPUT
AO1 - AO4 ; ANALOG DATA
DO ; MBS BIT DATA IN 15-BIT SHIFT REGISTER

D12	D13	D14	ADDRESS SELECT
0	0	0	DON'T CARE
0	0	1	AO1 SELECT
0	1	0	AO2 SELECT
0	1	1	AO3 SELECT
1	0	0	AO4 SELECT
1	0	1	DON'T CARE
1	1	0	DON'T CARE
1	1	1	DON'T CARE

0 ; LOW LEVEL
1 ; HIGH LEVEL

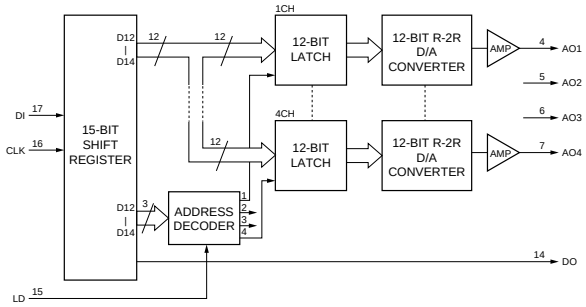

MC14050BF (MOTOROLA)FLAT PACKAGE
MC14050BFEL

C-MOS NON-INVERTING TYPE BUFFER/CONVERTER
-TOP VIEW-

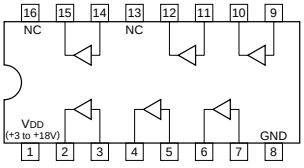

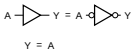

Y = A

A	Y
0	0
1	1

0 ; LOW LEVEL
1 ; HIGH LEVEL

MC1495M (MOTOROLA)FLAT PACKAGE

FOUR-QUADRANT MULTIPLIER
-TOP VIEW-

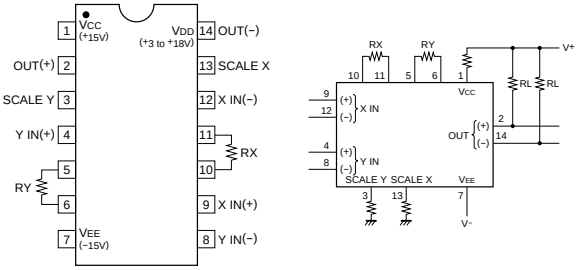

MC14528BF (MOTOROLA)FLAT PACKAGE
MC14528BFEL

C-MOS RETRIGGERABLE/RESETTABLE MMV
-TOP VIEW-

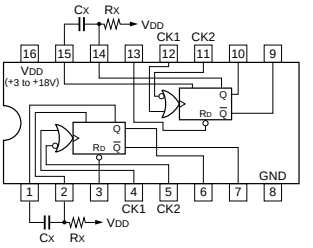

INPUTS			OUTPUTS	
CK1	CK2	RD	Q	$\overline{Q}$
↓	1	1	⎍	⎍
↓	0	1	Q	$\overline{Q}$
1	↑	1	Q	$\overline{Q}$
0	↑	1	⎍	⎍
X	X	0	0	1

0 ; LOW LEVEL
1 ; HIGH LEVEL
X ; DON'T CARE

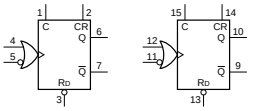

MC14020BFEL (MOTOROLA)FLAT PACKAGE

C-MOS 14-STAG RIPPLE-CARRY BINARY COUNTER/DRIVER
—TOP VIEW—

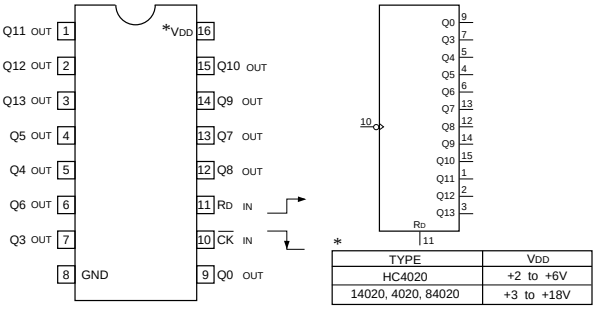

TYPE	VDD
HC4020	+2 to +6V
14020, 4020, 84020	+3 to +18V

COUNT		BINARY OUTPUTS											
		Q13	Q12	Q11	Q10	Q9	Q8	Q7	Q6	Q5	Q4	Q3	Q0
0	0000	0	0	0	0	0	0	0	0	0	0	0	0
1	0001	0	0	0	0	0	0	0	0	0	0	0	1
2	0002	0	0	0	0	0	0	0	0	0	0	0	0
3	0003	0	0	0	0	0	0	0	0	0	0	0	1
4	0004	0	0	0	0	0	0	0	0	0	0	0	0
⋮	⋮	⋮	⋮	⋮	⋮	⋮	⋮	⋮	⋮	⋮	⋮	⋮	⋮
16380	4FFC	1	1	1	1	1	1	1	1	1	1	1	0
16381	4FFD	1	1	1	1	1	1	1	1	1	1	1	1
16382	4FFE	1	1	1	1	1	1	1	1	1	1	1	0
16383	4FFF	1	1	1	1	1	1	1	1	1	1	1	1

IN HEXADECIMAL
IN DECIMAL

0 ; LOW LEVEL
1 ; HIGH LEVEL

RD	Q13-Q0
1	ALL LOW
0	COUNT

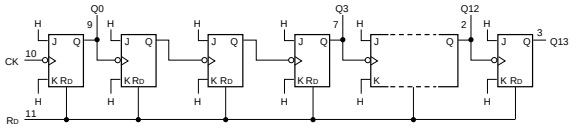

MC74HC163AF (MOTOROLA)FLAT PACKAGE
SN74HC163ANS-E05

C-MOS PRESETTABLE SYNCHRONOUS 4-BIT BINARY COUNTER
—TOP VIEW—

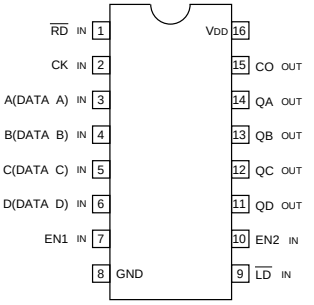

MODE SELECTION

CONTROL INPUTS				MODE
RD	LD	EN1	EN2	
0	X	X	X	RESET (SYNCHRONOUS)
1	0	X	X	PRESET (SYNCHRONOUS)
1	1	0	X	NO COUNT
1	1	X	0	NO COUNT
1	1	1	1	COUNT

CARRY OUTPUT "CO"

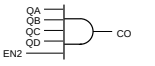

CO IS HIGH WHEN EN2 INPUT IS HIGH AND COUNT IS "15".

NOTE:

TYPE	VDD
HC	+2 to +6V
AC/VHC	+2 to +5.5V
HCT/ACT/FCT	+5V

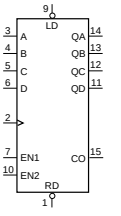

COUNT SEQUENCE

COUNT	OUTPUTS			
	QD	QC	QB	QA
0	0	0	0	0
1	0	0	0	1
2	0	0	1	0
3	0	0	1	1
4	0	1	0	0
5	0	1	0	1
6	0	1	1	0
7	0	1	1	1
8	1	0	0	0
9	1	0	0	1
10	1	0	1	0
11	1	0	1	1
12	1	1	0	0
13	1	1	0	1
14	1	1	1	0
15	1	1	1	1

http://getMANUAL.com

MC14520BF (MOTOROLA)FLAT PACKAGE
MC14520BFEL

C-MOS DUAL 4-BIT BINARY UP COUNTER

-TOP VIEW-

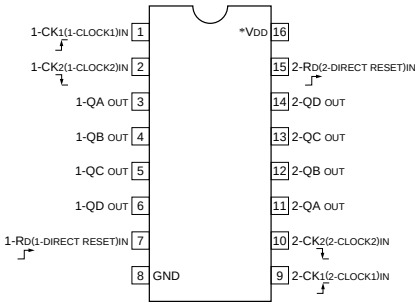

STATE	OUTPUTS			
	QD	QC	QB	QA
0	0	0	0	0
1	0	0	0	1
2	0	0	1	0
3	0	0	1	1
4	0	1	0	0
5	0	1	0	1
6	0	1	1	0
7	0	1	1	1
8	1	0	0	0
9	1	0	0	1
10	1	0	1	0
11	1	0	1	1
12	1	1	0	0
13	1	1	0	1
14	1	1	1	0
15	1	1	1	1

0 ; LOW LEVEL
1 ; HIGH LEVEL
X ; DON'T CARE

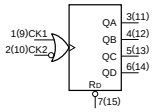

TYPE	VDD
HC4520	+2 to +6V
14520, 4520, 84520	+3 to +18V

CK1	CK2	RD	ACTION
↓	1	0	INCREMENT COUNTER
0	↑	0	INCREMENT COUNTER
↑	X	0	NO CHANGE
X	↓	0	NO CHANGE
↓	0	0	NO CHANGE
1	↑	0	NO CHANGE
X	X	1	QA THRU QD = 0

MSM82C55A-2GS-VK (OKI)FLAT PACKAGE
MSM82C55A-2GS

C-MOS PROGRAMMABLE PERIPHERAL INTERFACE

— TOP VIEW —

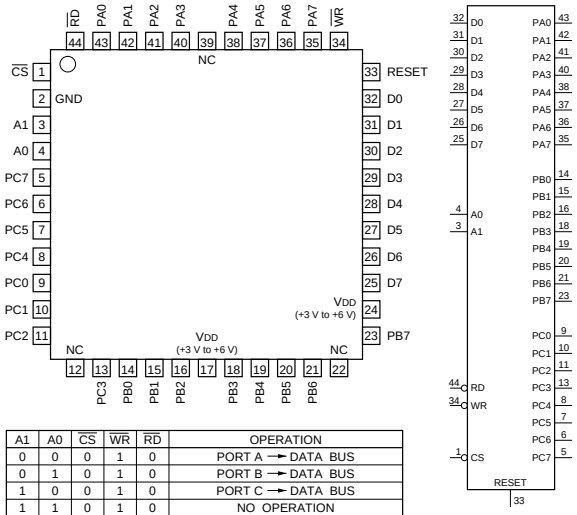

A1	A0	CS	WR	RD	OPERATION
0	0	0	1	0	PORT A → DATA BUS
0	1	0	1	0	PORT B → DATA BUS
1	0	0	1	0	PORT C → DATA BUS
1	1	0	1	0	NO OPERATION
0	0	0	0	1	DATA BUS → PORT A
0	1	0	0	1	DATA BUS → PORT B
1	0	0	0	1	DATA BUS → PORT C
1	1	0	0	1	DATA BUS → CONTROL REGISTER
X	X	1	X	X	HIGH IMPEDANCE

0 ; LOW LEVEL
1 ; HIGH LEVEL
X ; DON'T CARE

A0, A1 ; PORT SELECT ADDRESS
CS ; CHIP SELECT
D0 to 7 ; DATA BUS
PA0 to 7 ; PORT A IN/OUT
PB0 to 7 ; PORT B IN/OUT
PC0 to 7 ; PORT C IN/OUT
RD ; READ
WR ; WRITE

MC74HC4051F (MOTOROLA)FLAT PACKAGE
MC74HC4051FEL

C-MOS 8-CHANNEL ANALOG MULTIPLEXER/DEMULTIPLEXER

—TOP VIEW—

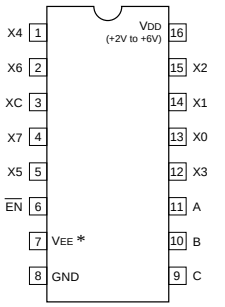

VEE * ; VDD – VEE=+3V to +12V

CONTROL INPUTS				SELECTED CHANNEL
EN	SELECT			
	C	B	A	
0	0	0	0	X0
0	0	0	1	X1
0	0	1	0	X2
0	0	1	1	X3
0	1	0	0	X4
0	1	0	1	X5
0	1	1	0	X6
0	1	1	1	X7
1	X	X	X	OPEN

0 ; LOW LEVEL
1 ; HIGH LEVEL
X ; DON'T CARE

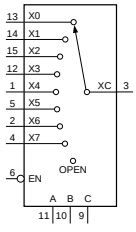

X0-X7 ; ANALOG INPUTS/OUTPUTS
XC ; COMMON INPUT/OUTPUT
A, B, C ; CHANNEL SELECT INPUT
EN ; ENABLE INPUT

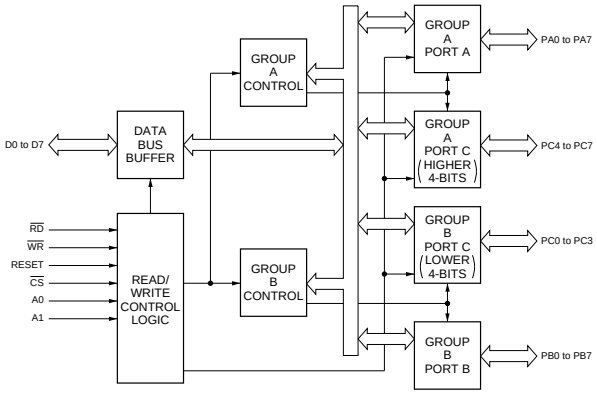

NJM1496V-TE2 (JRC)FLAT PACKAGE

BALANCED MODULATOR/DEMODULATOR

-TOP VIEW-

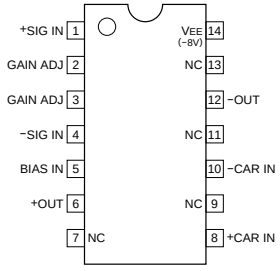

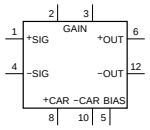

NJM3414AM-TE2 (JRC)FLAT PACKAGE

DUAL OPERATIONAL AMPLIFIER
— TOP VIEW —

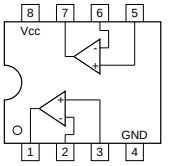

NOTE:

TYPE	Vcc
TA75358P	+12V
NJM3414M RC3414M	+15V
M5223FP	+36V

NJM78L09UA(TE1) (JRC)+12 V(100 mA)
TA78DS05F (TOSHIBA)FLAT PACKAGE +5V (0.03A)
TA78DS05F(TE12L)

POSITIVE VOLTAGE REGULATOR
-SIDE VIEW-

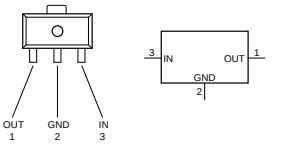

PC410 (SHARP)FLAT PACKAGE
PC410T

OPIC-OUTPUT PHOTO COUPLER
—TOP VIEW—

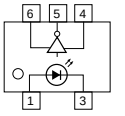

NJM4560M (JRC)FLAT PACKAGE
UPC4558G2 (NEC)FLAT PACKAGE
NJM4560M-TE2
NJM4558M-TE2

DUAL OPERATIONAL AMPLIFIER
— TOP VIEW —

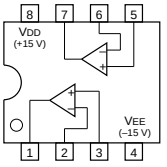

SC7S04F (MOTOROLA)CHIP PACKAGE
TC4S69F (TOSHIBA)CHIP PACKAGE
TC7S04FU(TE85R) (TOSHIBA)FLAT PACKAGE
TC7S04F(TE85R)
TC4S69F(TE85R)

C-MOS INVERTER

—TOP VIEW—

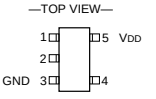

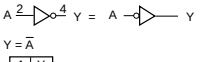

Y = $\overline{A}$

A	Y
0	1
1	0

0 ; LOW LEVEL
1 ; HIGH LEVEL

TYPE	VDD
7S04F 7SU04F 7SU04FU	+2 to +6V
4S69F 4SU69F	+3 to +18V
7SH04FU	+2 to +5.5V

NJM567M (JRC)FLAT PACKAGE

TONE DECODER
-TOP VIEW-

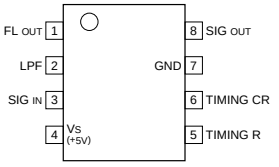

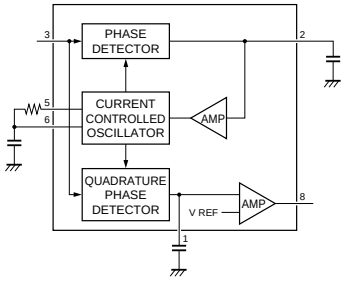

SC7S32F (MOTOROLA)CHIP PACKAGE
TC7S32F(TE85R)

C-MOS 2-INPUT OR GATE

—TOP VIEW—

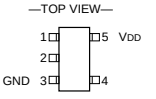

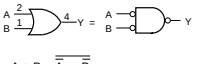

Y = A + B = $\overline{\overline{A} \cdot \overline{B}}$

A	B	Y
0	0	0
0	1	1
1	0	1
1	1	1

0 ; LOW LEVEL
1 ; HIGH LEVEL

TYPE	VDD
7S32F 7S32FU	+2 to +6V
4S71F	+3 to +18V
7SH32FU	–2 to +5.5V

SN74HC00ANS (TI)FLAT PACKAGE
SN74HC00APW-E20 (TI)FLAT PACKAGE
SN74HC00ANS-E05
SN74HC00APW-E05

C-MOS QUAD 2-INPUT NAND GATES
—TOP VIEW—

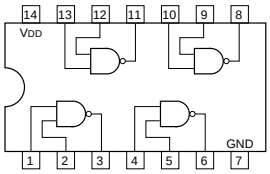

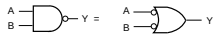

$Y = \overline{A \cdot B} = \overline{A} + \overline{B}$

A	B	Y
0	0	1
0	1	1
1	0	1
1	1	0

0 ; LOW LEVEL
1 ; HIGH LEVEL

NOTE:

TYPE	VDD
TC74AC00 TYPE TC74VHC00	+2 to +5.5V
MC74HCT00N	+5V
74ACT00 TYPE	+4.5 to +5.5V
OTHER TYPES	+2 to +6V

SN74HC02ANS (TI)FLAT PACKAGE
SN74HC02APW-E05 (TI)
SN74HC02ANS-E05

C-MOS QUAD 2-INPUT NOR GATES
-TOP VIEW-

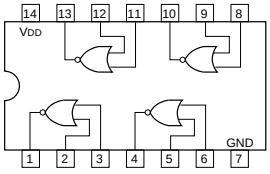

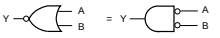

$Y = \overline{A + B} = \overline{A} \cdot \overline{B}$

A	B	Y
0	0	1
0	1	0
1	0	0
1	1	0

0 ; LOW LEVEL
1 ; HIGH LEVEL

NOTE:

TYPE	VDD
HC	+2 to +6V
AC/VHC	+2 to +5.5V
HCT/ACT	+5V

SN74HC04ANS (TI)FLAT PACKAGE
SN74HC04APW-E20 (TI)FLAT PACKAGE
SN74HC04ANS-E05
SN74HC04APW-E05

C-MOS HEX INVERTERS
-TOP VIEW-

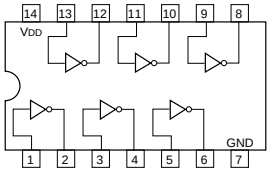

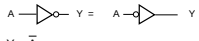

$Y = \overline{A}$

A	Y
0	1
1	0

0 ; LOW LEVEL
1 ; HIGH LEVEL

NOTE:

TYPE	VDD
74HCT04 TYPE	+5V
TC74AC04 TYPE TC74VHC04 TYPE	+2 to +5.5V
74ACT04 TYPE	+4.5 to +5.5V
OTHER TYPES	+2 to +6V

SN74HC08ANS (TI)FLAT PACKAGE
SN74HC08APW-E05 (TI)FLAT PACKAGE
SN74HC08ANS-E05

C-MOS QUAD 2-INPUT AND GATE
- TOP VIEW -

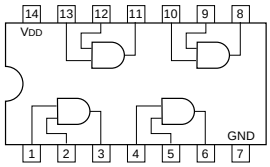

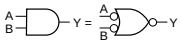

$Y = A \cdot B = \overline{\overline{A} + \overline{B}}$

A	B	Y
0	0	0
0	1	0
1	0	0
1	1	1

0 ; LOW LEVEL
1 ; HIGH LEVEL

NOTE :

TYPE	VDD
AC	+2 to +5.5V
TC40H	+2 to +8V
ACT/HCT	+5V
OTHER TYPES	+2 to +6V

SN74HC132ANS (TI)FLAT PACKAGE
SN74HC132ANS-E05

C-MOS 2-INPUT NAND SCHMITT TRIGGER
—TOP VIEW—

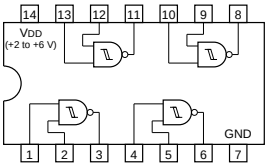

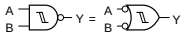

$Y = \overline{A \cdot B} = \overline{A} + \overline{B}$

A	B	Y
0	0	1
0	1	1
1	0	1
1	1	0

0 ; LOW LEVEL
1 ; HIGH LEVEL

NOTE:

TYPE	VDD
HC	+2 to +6 V
VHC	+2 to +5.5 V

SN74HC138ANS (TI)FLAT PACKAGE

C-MOS 3-TO-8 LINE DECODER / DEMULTIPLEXER
—TOP VIEW—

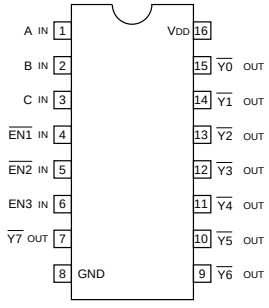

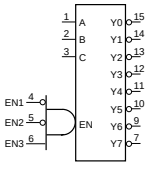

NOTE:

TYPE	VDD
74HCT138 TYPE	+5V
74ACT138 TYPE	+4.5 to +5.5V
TC74AC138 TYPE TC74VHC138	+2 to +5.5V
OTHER TYPES	+2 to +6V

INPUTS				OUTPUTS							
EN	C	B	A	Y7	Y6	Y5	Y4	Y3	Y2	Y1	Y0
0	X	X	X	1	1	1	1	1	1	1	1
1	0	0	0	1	1	1	1	1	1	1	0
1	0	0	1	1	1	1	1	1	1	0	1
1	0	1	0	1	1	1	1	1	0	1	1
1	0	1	1	1	1	1	1	0	1	1	1
1	1	0	0	1	1	1	0	1	1	1	1
1	1	0	1	1	1	0	1	1	1	1	1
1	1	1	0	1	0	1	1	1	1	1	1
1	1	1	1	0	1	1	1	1	1	1	1

$EN = \overline{EN1} \cdot \overline{EN2} \cdot EN3$

0 ; LOW LEVEL
1 ; HIGH LEVEL
X ; DON'T CARE

SN74HC153ANS (TI)FLAT PACKAGE
SN74HC153ANS-E05

C-MOS DUAL 4-LINE-TO-1-LINE DATA SELECTOR/MULTIPLEXER
-TOP VIEW-

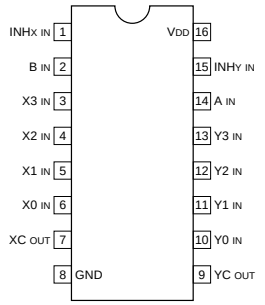

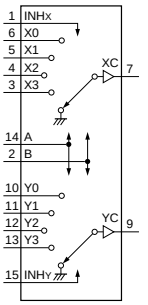

NOTE:

TYPE	VDD
ACT/HCT/FCT	+5V
40H	+2 to +8V
TC74AC/TC74VHC	+2 to +5.5V
OTHER TYPES	+2 to +6V

CONTROL IN			ON
INH	B	A	CHANNEL
0	0	0	0
0	0	1	1
0	1	0	2
0	1	1	3
1	X	X	GND

0 : LOW LEVEL
1 : HIGH LEVEL
X : DON'T CARE

SN74HC158ANS (TI)FLAT PACKAGE
SN74HC158ANS-E05

C-MOS 2-LINE-TO-1-LINE INVERTED DATA SELECTOR/MULTIPLEXER
-TOP VIEW-

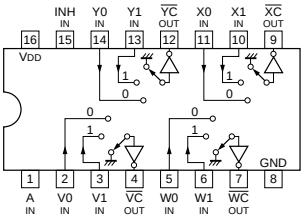

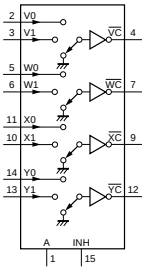

CONT. IN		ON
INH	A	CHANNEL
0	0	0
0	1	1
1	X	GND

0 ; LOW LEVEL
1 ; HIGH LEVEL
X ; DON'T CARE

NOTE :

TYPE	VDD
74AC/HC	+2 to +6V
74ACT/HCT	+5V

SN74HC32ANS (TI)FLAT PACKAGE
SN74HC32ANS-E05

C-MOS QUAD 2-INPUT OR GATES
—TOP VIEW—

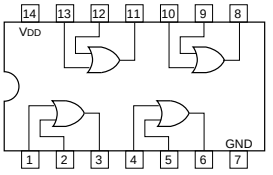

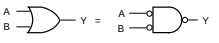

Y = A + B = $\overline{\overline{A} \cdot \overline{B}}$

A	B	Y
0	0	0
0	1	1
1	0	1
1	1	1

0 ; LOW LEVEL
1 ; HIGH LEVEL

NOTE:

TYPE	VDD
AC/VHC	+2 to +5.5V
HC	+2 to +6V

SN74HC541ANS (TI)FLAT PACKAGE
SN74HC541ANS-E05

C-MOS BUFFERS AND LINE DRIVERS WITH 3-STATE OUTPUTS
- TOP VIEW -

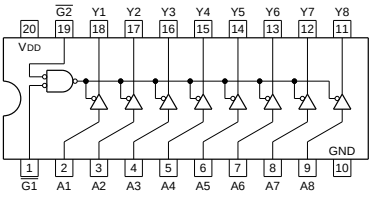

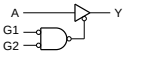

G1	G2	A	Y
0	0	0	1
0	0	1	0
1	X	X	HI-Z
X	1	X	HI-Z

0 ; LOW LEVEL
1 ; HIGH LEVEL
X ; DON'T CARE
HI-Z ; HIGH IMPEDANCE

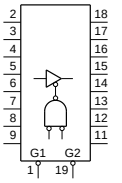

NOTE :

TYPE	VDD
TC74AC/TC74VHC	+2 to +5.5V
ABT/ACT/BCT/HCT/VHCT	+5V
OTHER TYPES	+2 to +6V

SN74LS221NS-E05 (TI)FLAT PACKAGE

TTL MONOSTABLE MULTIVIBRATOR WITH SCHMITT TRIGGER INPUT
—TOP VIEW—

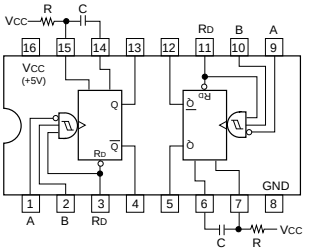

INPUTS			OUTPUTS	
RD	A	B	Q	$\overline{Q}$
0	X	X	0	1
X	1	X	0	1
X	X	0	0	1
1	0	↓	⊓	⊔
1	↓	1	⊓	⊔
↓	0	1	⊓	⊔

0 ; LOW LEVEL
1 ; HIGH LEVEL
X ; DON'T CARE

OUTPUT PULSE WIDTH = 0.7CR

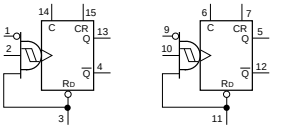

SN74HC165ANS (TI)FLAT PACKAGE
SN74HC165APW-E05 (TI)FLAT PACKAGE
SN74HC165ANS-E05

C-MOS SERIAL-OR PARALLEL-INPUT SHIFT REGISTER

-TOP VIEW-

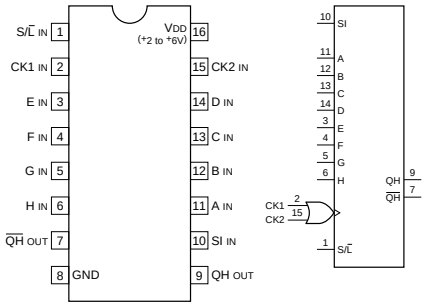

SI ; SERIAL DATA IN
A-H ; PARALLEL DATA IN
CK1,CK2 ; CLOCK IN (_|‾)
S/L ; SHIFT/LOAD IN
QH QH ; 8th BIT OUT (COMPLEMENTALY)

INPUTS				CONTENTS		OUTPUT	OPERATION
S/L	CK1+CK2	SI	A---------H	QA	QB-----	QH	
0	X	X	a---------h	a	b-----	h	PARALLEL LOAD
1	_|‾	0	X	0	QAo---	QGo	RIGHT SHIFT
1	_|‾	1	X	1	QAo---	QGo	
1	‾|_	X	X	QAo	QBo---	QHo	NO COUNT
1	0	X	X	QAo	QBo---	QHo	
1	1	X	X	QAo	QBo---	QHo	

0 ; LOW LEVEL
1 ; HIGH LEVEL
X ; DON'T CARE
a-h ; LEVEL OF INPUTS A-H
QAo-QHo ; LEVEL OF QA-QH BEFORE THE INDICATED INPUT CONDITIONS WERE ESTABLISHED

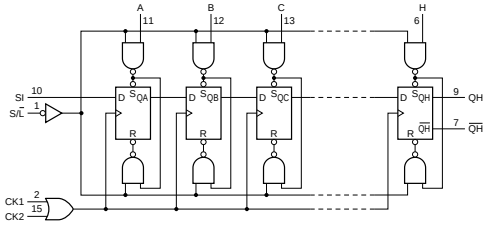

SN74LS123NS (TI)FLAT PACKAGE
SN74LS123NS-E05

TTL RETRIGGERABLE MONOSTABLE MULTIVIBRATORS WITH DIRECT RESET

—TOP VIEW—

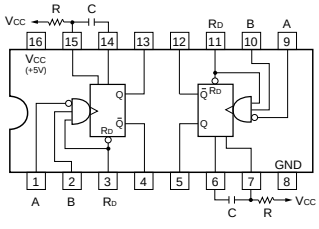

INPUTS			OUTPUTS	
RD	A	B	Q	Q̄
0	X	X	0	1
X	1	X	0	1
X	X	0	0	1
1	0	↑	⎍	⎍
1	↓	1	⎍	⎍
↑	0	1	⎍	⎍

0 ; LOW LEVEL
1 ; HIGH LEVEL
X ; DON'T CARE

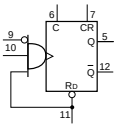

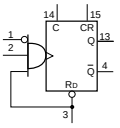

OUTPUT PULSE WIDTH

'123 ;T_W=0.28 $(1+\frac{700}{R})$ CR

'L123;T_W=0.33 $(1+\frac{700}{R})$ CR

'123 ;T_W=0.25 $(1+\frac{700}{R})$ CR

'L123;T_W=0.29 $(1+\frac{700}{R})$ CR

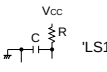

'LS123;T_W=0.45CR

SN75158PS (TI)
SN75158PS-E05

DUAL DIFFERENTIAL LINE DRIVE

— TOP VIEW —

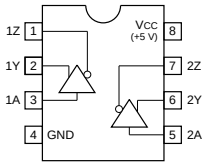

TA8129Z (TOSHIBA)

FM IF SYSTEM (DIFFERENTIAL PEAK DETECT)

— SIDE VIEW —

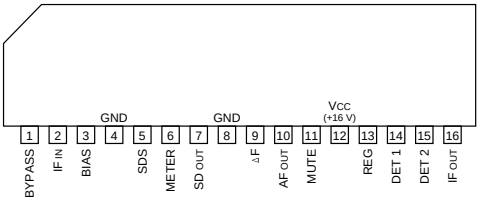

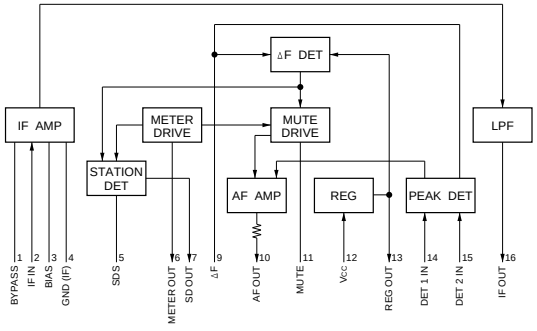

TC4S30F (TOSHIBA)CHIP PACKAGE
TC7S86FU (TOSHIBA)CHIP PACKAGE
TC4S30F(TE85R)
TC7S86FU(TE85R)

C-MOS 2-INPUT EXCLUSIVE OR GATE

—TOP VIEW—

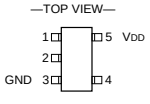

$Y = \overline{A} \cdot B + A \cdot \overline{B}$

A	B	Y
0	0	0
0	1	1
1	0	1
1	1	0

0 ; LOW LEVEL
1 ; HIGH LEVEL

TYPE	VDD
7S86FU 7S86F	+2 to +6V
4S30F	+3 to +18V

TC4W53FU (TOSHIBA)CHIP PACKAGE
TC4W53FU(TE12R)

C-MOS 2-CHANNEL MULTIPLEXER / DEMULTIPLEXER

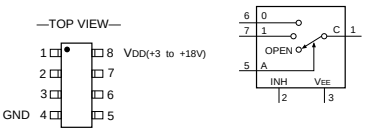

CONT.INPUT		ON
INH	A	CHANNEL
0	0	0
0	1	1
1	X	OPEN

0 ; LOW LEVEL
1 ; HIGH LEVEL
X ; DON'T CARE

TC74HC221AF (TOSHIBA)FLAT PACKAGE
TC74HC221AF(EL)

C-MOS MONOSTABLE MULTIVIBRATOR WITH SCHMITT TRIGGER INPUT
—TOP VIEW—

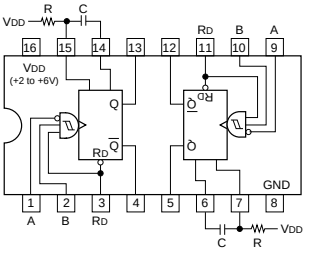

INPUTS			OUTPUTS	
RD	A	B	Q	Q
0	X	X	0	1
X	1	X	0	1
X	X	0	0	1
1	0	↑	⌐	⌐
1	↓	1	⌐	⌐
↓	0	1	⌐	⌐

0 ; LOW LEVEL
1 ; HIGH LEVEL
X ; DON'T CARE

OUTPUT PULSE WIDTH = 0.7CR

TC7S66FU (TOSHIBA)
TC7S66FU(TE85R)

C-MOS ANALOG SWITCH
—TOP VIEW—

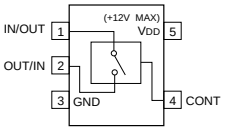

TC74HC86AF (TOSHIBA)FLAT PACKAGE
SN74HC86ANS-E05

C-MOS QUAD EXCLUSIVE OR GATES
—TOP VIEW—

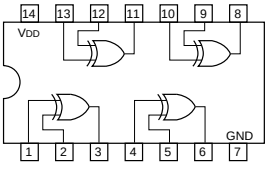

$Y = \overline{A} \cdot B + A \cdot \overline{B}$

A	B	Y
0	0	0
0	1	1
1	0	1
1	1	0

0 ; LOW LEVEL
1 ; HIGH LEVEL

NOTE :

TYPE	VDD
TC74AC/VHC	+2V to +5.5V
TC74HCT	+5V
OTHER TYPES	+2V to +6V

TC74HC4053AFS (TOSHIBA)FLAT PACKAGE
TC74HC4053AFS-EL

C-MOS TRIPLE 2-CHANNEL ANALOG MULTIPLEXER/DEMULTIPLEXER
-TOP VIEW-

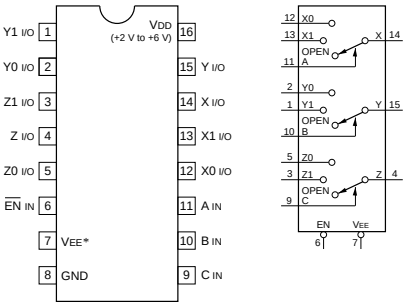

VEE*; VDD – VEE = +3 V to +12 V
VEE ≤ GND

CONTROL INPUTS				ON CHANNEL		
EN	SELECT					
	C	B	A			
0	0	0	0	Z0	Y0	X0
0	0	0	1	Z0	Y0	X1
0	0	1	0	Z0	Y1	X0
0	0	1	1	Z0	Y1	X1
0	1	0	0	Z1	Y0	X0
0	1	0	1	Z1	Y0	X1
0	1	1	0	Z1	Y1	X0
0	1	1	1	Z1	Y1	X1
1	X	X	X	OPEN		

0 ; LOW LEVEL
1 ; HIGH LEVEL
X ; DON'T CARE

TC7S08FU(TE85R) (TOSHIBA)FLAT PACKAGE

C-MOS 2-INPUT AND GATE

—TOP VIEW—

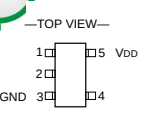

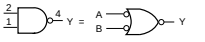

$Y = A \cdot B = \overline{\overline{A} + \overline{B}}$

A	B	Y
0	0	0
0	1	0
1	0	0
1	1	1

0 ; LOW LEVEL
1 ; HIGH LEVEL

TYPE	VDD
7S08F 7S08FU	+2 to +6V
4S81F 14S81F	+3 to +18V
7SH08FU	–2 to +5.5V

TC7W00FU (TOSHIBA)CHIP PACKAGE
TC7W00FU(TE12R)

C-MOS DUAL 2-INPUT NAND GATE
-TOP VIEW-

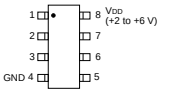

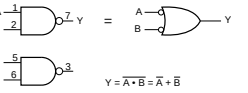

$Y = \overline{A \cdot B} = \overline{A} + \overline{B}$

A	B	Y
0	0	1
0	1	1
1	0	1
1	1	0

0; LOW LEVEL
1; HIGH LEVEL

TC7W02F (TOSHIBA)FLAT PACKAGE
TC7W02FU(TE12R)

C-MOS DUAL 2-INPUT NOR GATE
—TOP VIEW—

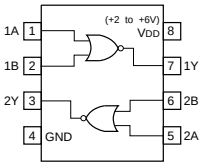

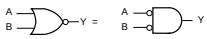

$Y = \overline{A + B} = \overline{A} \cdot \overline{B}$

A	B	Y
0	0	1
0	1	0
1	0	0
1	1	0

0 ; LOW LEVEL
1 ; HIGH LEVEL

TC7W04FU(TE12R) (TOSHIBA)FLAT PACKAGE

C-MOS HEX INVERTERS

—TOP VIEW—

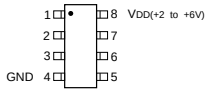

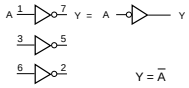

$Y = \overline{A}$

A	Y
0	1
1	0

0 ; LOW LEVEL
1 ; HIGH LEVEL

TC7W08F (TOSHIBA)CHIP PACKAGE
TC7W08FU (TOSHIBA)CHIP PACKAGE
TC7W08F(TE12R)
TC7W08FU(TE12R)

C-MOS 2-INPUT AND GATE

—TOP VIEW—

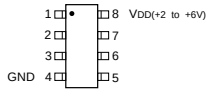

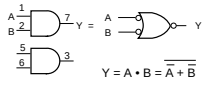

$Y = A \cdot B = \overline{\overline{A} + \overline{B}}$

A	B	Y
0	0	0
0	1	0
1	0	0
1	1	1

0 ; LOW LEVEL
1 ; HIGH LEVEL

TC7W74FU (TOSHIBA)CHIP PACKAGE
TC7W74FU(TE12R)

C-MOS D-TYPE FLIP-FLOPS WITH DIRECT SET / RESET
—TOP VIEW—

—TOP VIEW—

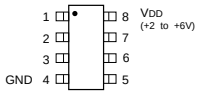

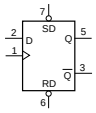

INPUTS				OUTPUTS	
$\overline{SD}$	$\overline{RD}$	CK	D	Qn+1	$\overline{Qn+1}$
0	1	X	X	1	0
1	0	X	X	0	1
0	0	X	X	1	1
1	1	↑	1	1	0
1	1	↑	0	0	1
1	1	↓	X	Qn	$\overline{Qn}$

0 ; LOW LEVEL
1 ; HIGH LEVEL
X ; DON'T CARE

TL062CPW (TI)FLAT PACKAGE
TL082CPW-E05 (TI)FLAT PACKAGE
TL062CPW-E05

OPERATIONAL AMPLIFIER
(J FET INPUT)
—TOP VIEW—

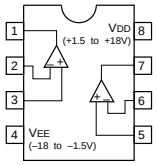

TL064CPW (TI)
TL064CPW-E05

OPERATIONAL AMPLIFIER
(J FET INPUT)
—TOP VIEW—

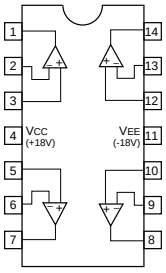

TL084CPW-E20 (TI)FLAT PACKAGE
TL084CPW-E05

OPERATIONAL AMPLIFIER
(J FET INPUT)
—TOP VIEW—

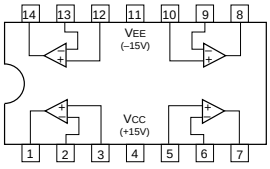

TLC272CPW-E05 (TI)FLAT PACKAGE

OPERATIONAL AMPLIFIER
—TOP VIEW—

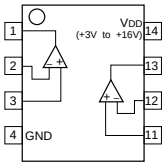

TL1451ACNS (TI)FLAT PACKAGE
TL1451ACNS-E05

DUAL PWM POWER CONTROLLER
-TOP VIEW-

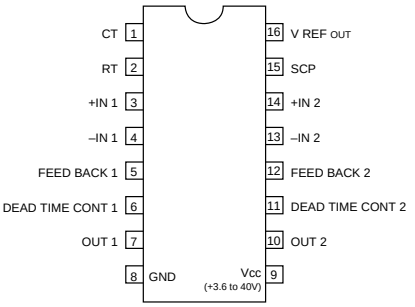

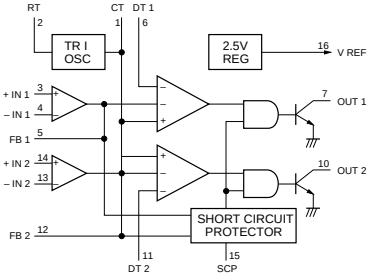

UPC311G2 (NEC)FLAT PACKAGE
UPC311G2-E2

VOLTAGE COMPARATOR
-TOP VIEW-

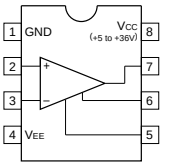

UPC319G2 (NEC)FLAT PACKAGE

DUAL VOLTAGE COMPARATOR
-TOP VIEW-

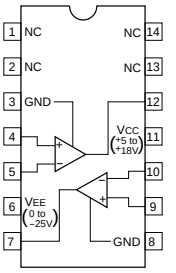

TLC274CPW (TI)FLAT PACKAGE
TLC274CPW-E05

C-MOS OPERATIONAL AMPLIFIER
—TOP VIEW—

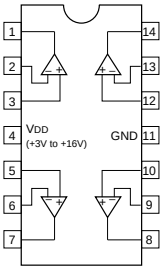

MC14538BFE (MOTOROLA)FLAT PACKAGE
MC14538BFEL

C-MOS DUAL RETRIGGERABLE MONOSTABLE MULTIVIBRATORS
-TOP VIEW-

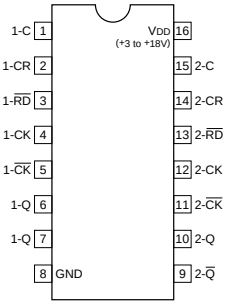

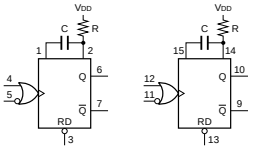

OUTPUT PULSE WIDTH = C·R

RETRIGGERABLE M.M.V

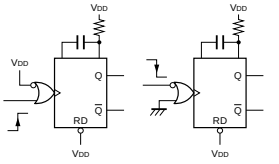

NON-RETRIGGERABLE M.M.V

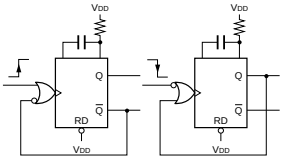

UPA101G (NEC)FLAT PACKAGE
UPA101G-E2

TRANSISTOR ARRAY
—TOP VIEW—

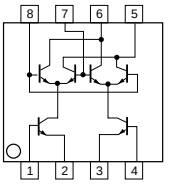

UPD4701AGT (NEC)FLAT PACKAGE

C-MOS INCREMENTAL ROTARY ENCODER
—TOP VIEW—

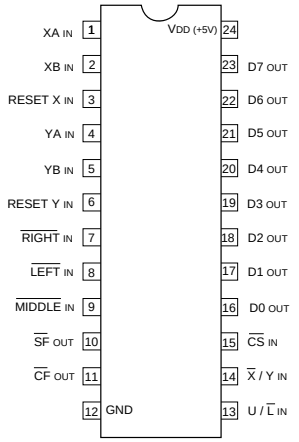

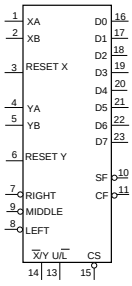

CS ; CHIP SELECT
X /Y ; X/Y COUNTER SELECT
XA, YA ; INPUT A PHASE
XB, YB ; INPUT B PHASE
RIGHT, LEFT, MIDDLE ; SWITCH INPUT FOR INTERNAL STATUS

U / L ; UPPER/LOWER BYTE SELECT
D0 to D7 ; DATA
CF ; COUNT FLAG
SF ; SWITCH FLAG
RESET X ; COUNTER RESET
RESET Y ; COUNTER RESET

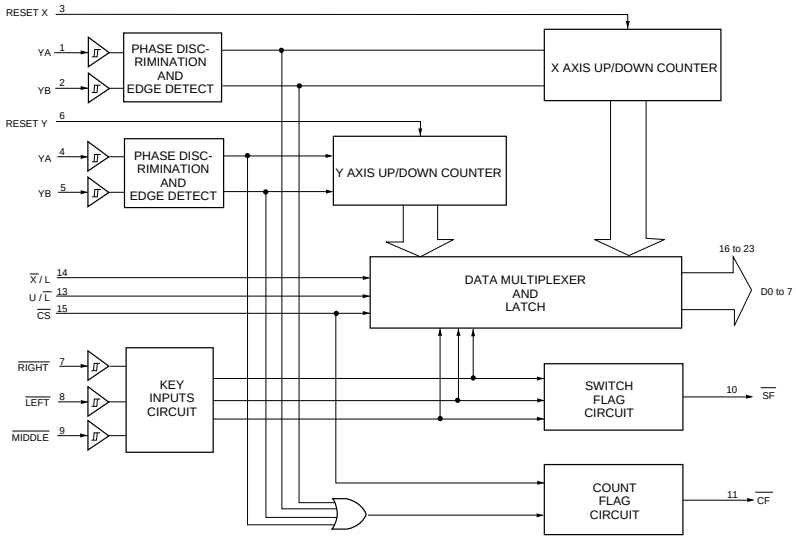

UPD6453GT-610 (NEC)FLAT PACKAGE
UPD6453GT-610-E2

UPD6453GT (1/2)
IL00

C-MOS ON-SCREEN CHARACTER DISPLAY
—TOP VIEW—

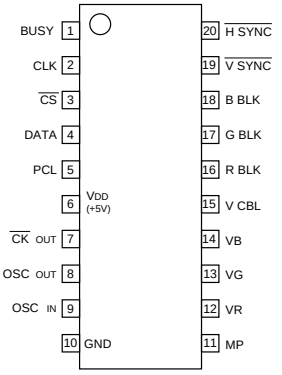

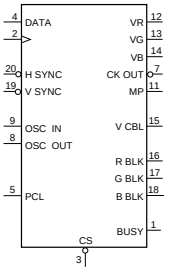

INPUT

CLK	;	CLOCK
CS	;	CHIP SELECT
DATA	;	SERIAL DATA
H SYNC	;	HORIZONTAL SYNC
OSC IN	;	OSCILLATOR IN
PCL	;	POWER ON CLEAR
V SYNC	;	VERTICAL SYNC

OUTPUT

BBLK, RBLK, GBLK	;	B, R, G, BLANKING
BUSY	;	BUSY OUT
CK OUT	;	CLOCK
MP	;	MASK PULSE
OSC OUT	;	OSCILLATOR OUT
VR, VG, VB	;	R, G, B, CHARACTER DATA
VCBL	;	VIDEO CUT BLANKING

UPD6453GT (2/2)

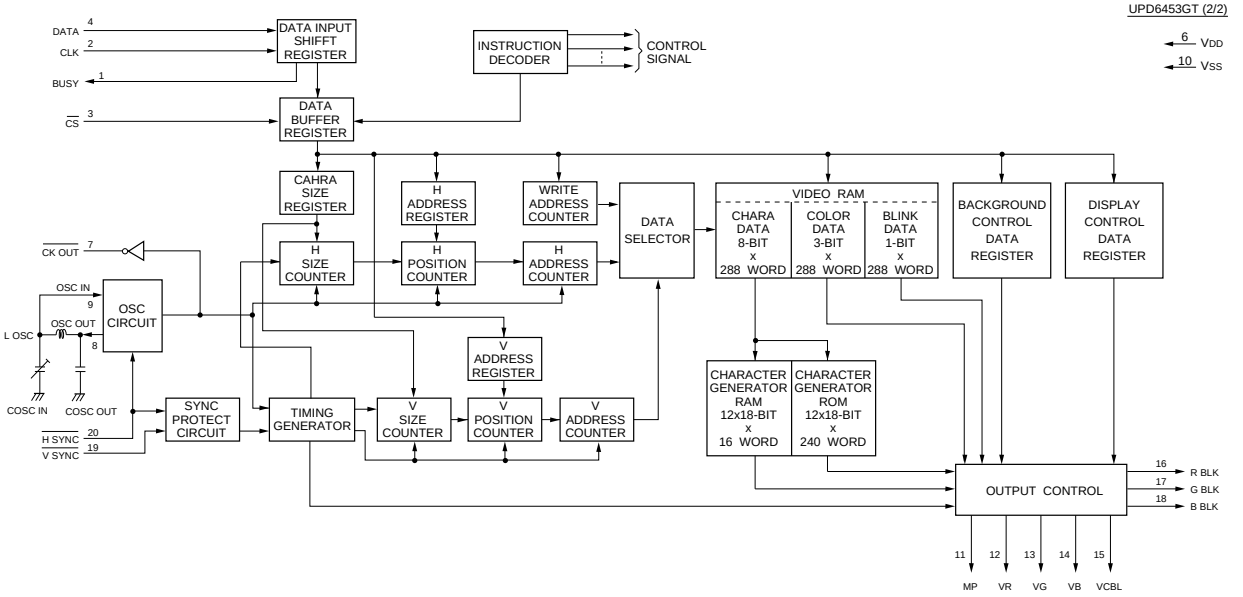

http://getMANUAL.com

Section 3
Block Diagrams

3-1

OVERALL BLOCK

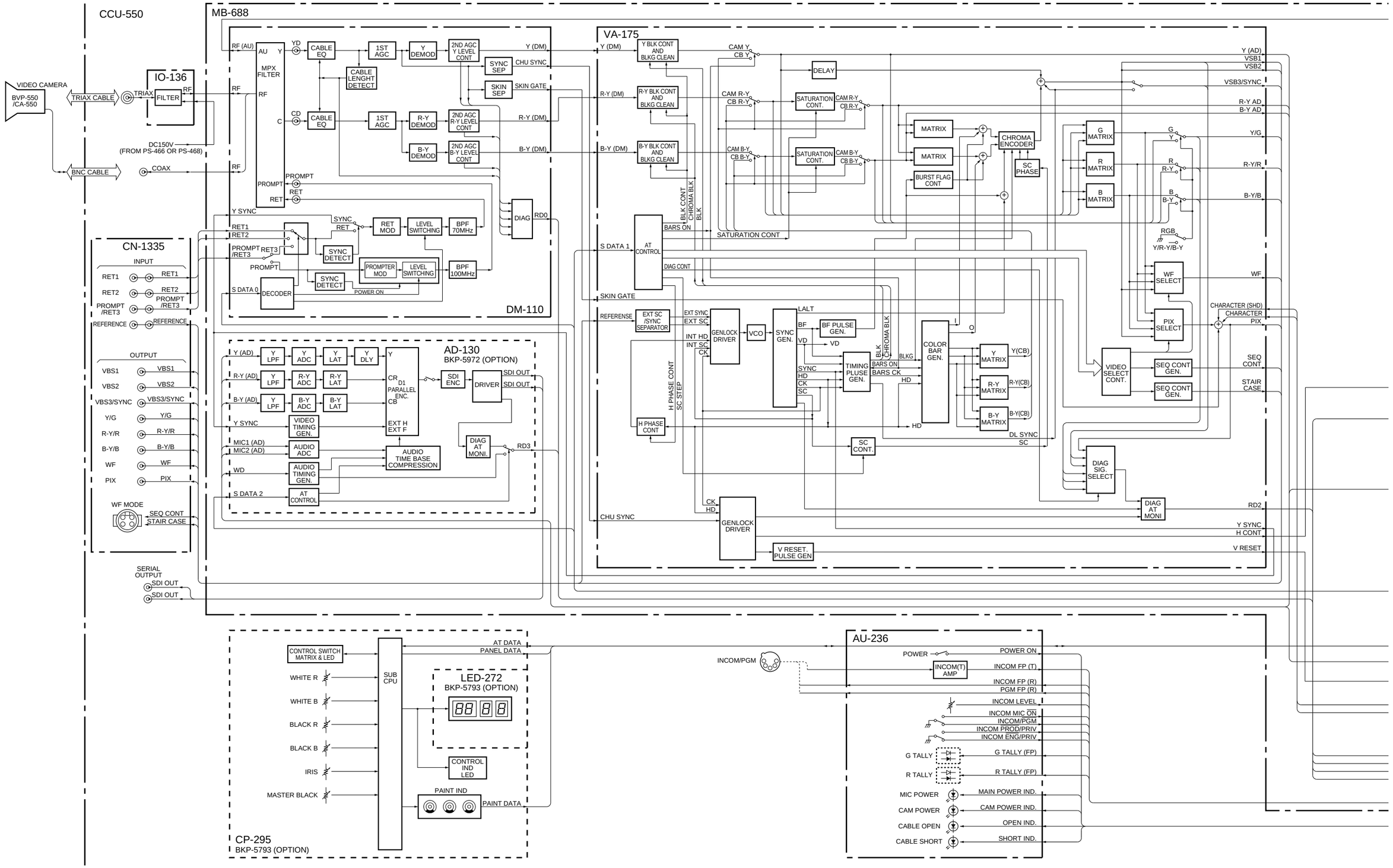

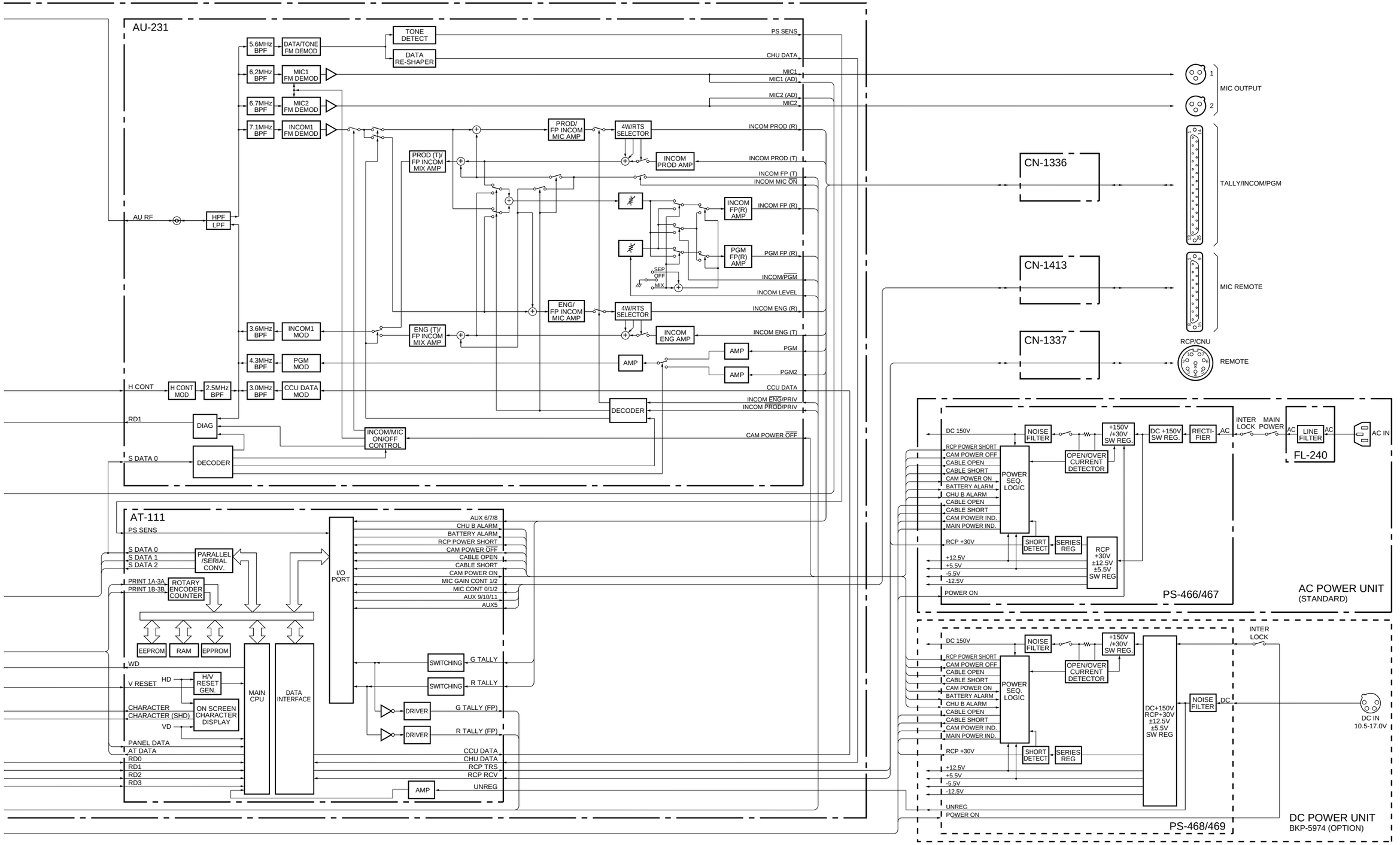

OVERALL BLOCK

CCU-550/550P

CCU550-OVERALL BLOCK/M#1, #2

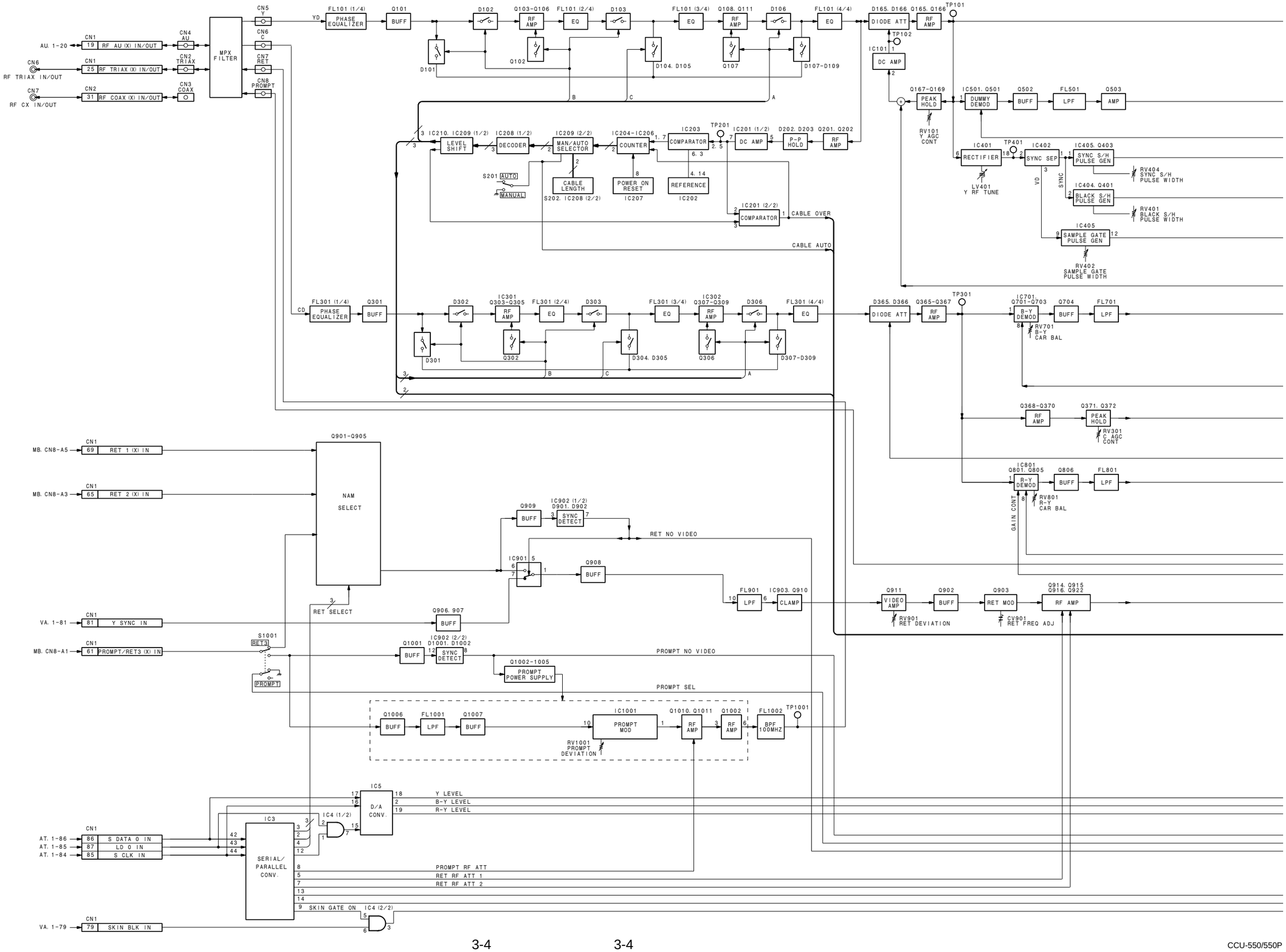
AU. 1-20
CN1 19 RF AU (X) IN/OUT
CN4 AU
CN6 RF TRIAX IN/OUT
CN1 25 RF TRIAX (X) IN/OUT
CN2 TRIAX
CN7 RF CX IN/OUT
CN2 31 RF COAX (X) IN/OUT
CN3 COAX
MPX FILTER
CN5 Y
CN6 C
CN7 RET
CN8 PROMPT
YD
FL101 (1/4) PHASE EQUALIZER
Q101 BUFF
D102
Q103-Q106 RF AMP
FL101 (2/4) EQ
D103
FL101 (3/4) EQ
Q108, Q111 RF AMP
D106
FL101 (4/4) EQ
D101
Q102
D104, D105
Q107
D107-D109
D165, D166 Q165, Q166 DIODE ATT
RF AMP
TP101
TP102
IC101 DC AMP
Q167-Q169 PEAK HOLD
RV101 Y AGC CONT
IC501, Q501 DUMMY DEMOD
Q502 BUFF
FL501 LPF
Q503 AMP
IC210, IC209 (1/2) LEVEL SHIFT
IC208 (1/2) DECODER
IC209 (2/2) MAN/AUTO SELECTOR
IC204-IC206 COUNTER
IC203 COMPARATOR
TP201
IC201 (1/2) DC AMP
D202, D203 Q201, Q202 P-P HOLD
RF AMP
S201 AUTO MANUAL
CABLE LENGTH
S202, IC208 (2/2)
POWER ON RESET
IC207
REFERENCE
IC202
IC201 (2/2) COMPARATOR
CABLE OVER
CABLE AUTO
IC401 RECTIFIER
TP401
IC402 SYNC SEP
IC405, Q403 SYNC S/H PULSE GEN
RV404 SYNC S/H PULSE WIDTH
LV401 Y RF TUNE
VD
SYNC
IC404, Q401 BLACK S/H PULSE GEN
RV401 BLACK S/H PULSE WIDTH
IC405 SAMPLE GATE PULSE GEN
RV402 SAMPLE GATE PULSE WIDTH
CD
FL301 (1/4) PHASE EQUALIZER
Q301 BUFF
D302
IC301 Q303-Q305 RF AMP
FL301 (2/4) EQ
D303
FL301 (3/4) EQ
IC302 Q307-Q309 RF AMP
D306
FL301 (4/4) EQ
D301
Q302
D304, D305
Q306
D307-D309
D365, D366 DIODE ATT
Q365-Q367 RF AMP
TP301
IC701, Q701-Q703 B-Y DEMOD
Q704 BUFF
FL701 LPF
RV701 B-Y CAR BAL
Q368-Q370 RF AMP
Q371, Q372 PEAK HOLD
RV301 C AGC CONT
IC801 Q801, Q805 R-Y DEMOD
Q806 BUFF
FL801 LPF
GAIN CONT
RV801 R-Y CAR BAL
MB. CN8-A5
CN1 69 RET 1 (X) IN
MB. CN8-A3
CN1 65 RET 2 (X) IN
Q901-Q905 NAM SELECT
Q909 BUFF
IC902 (1/2) D901, D902 SYNC DETECT
RET NO VIDEO
IC901
Q908 BUFF
FL901 LPF
IC903, Q910 CLAMP
Q911 VIDEO AMP
Q902 BUFF
Q903 RET MOD
Q914, Q915 Q916, Q922 RF AMP
RV901 RET DEVIATION
CV901 RET FREQ ADJ
RET SELECT
VA. 1-81
CN1 81 Y SYNC IN
Q906, 907 BUFF
S1001 RET3
MB. CN8-A1
CN1 61 PROMPT/RET3 (X) IN
PROMPT
Q1001 BUFF
IC902 (2/2) D1001, D1002 SYNC DETECT
PROMPT NO VIDEO
Q1002-1005 PROMPT POWER SUPPLY
PROMPT SEL
Q1006 BUFF
FL1001 LPF
Q1007 BUFF
IC1001 PROMPT MOD
RV1001 PROMPT DEVIATION
Q1010, Q1011 RF AMP
Q1002 RF AMP
FL1002 BPF 100MHZ
TP1001
IC5 D/A CONV.
Y LEVEL
B-Y LEVEL
R-Y LEVEL
IC3 SERIAL/ PARALLEL CONV.
IC4 (1/2)
AT. 1-86
CN1 86 S DATA O IN
AT. 1-85
CN1 87 LD O IN
AT. 1-84
CN1 85 S CLK IN
PROMPT RF ATT
RET RF ATT 1
RET RF ATT 2
SKIN GATE ON
IC4 (2/2)
VA. 1-79
CN1 79 SKIN BLK IN

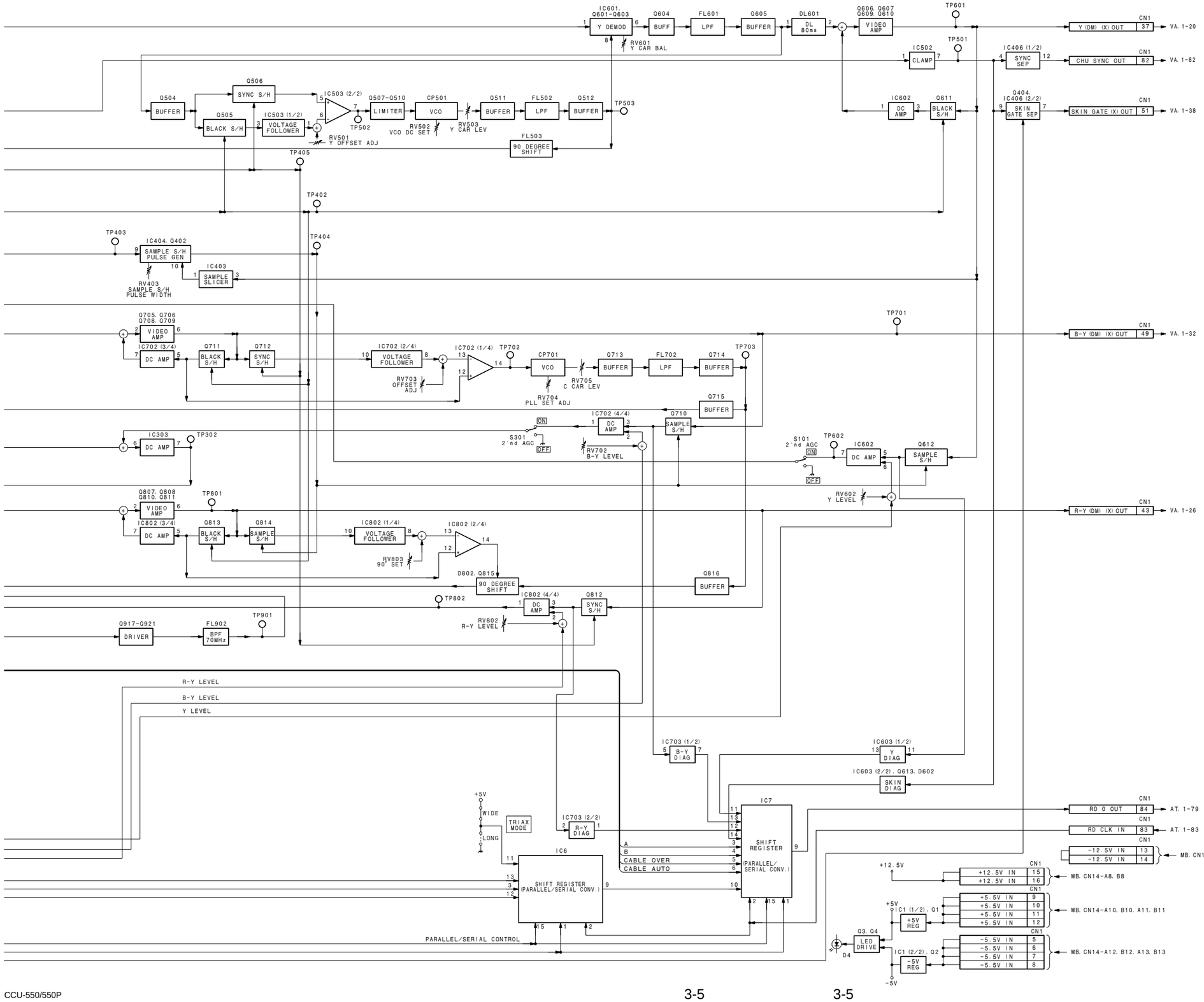

DM-110
CCU-550/550P
CCU550-DM110 BLOCK/M#1, #2

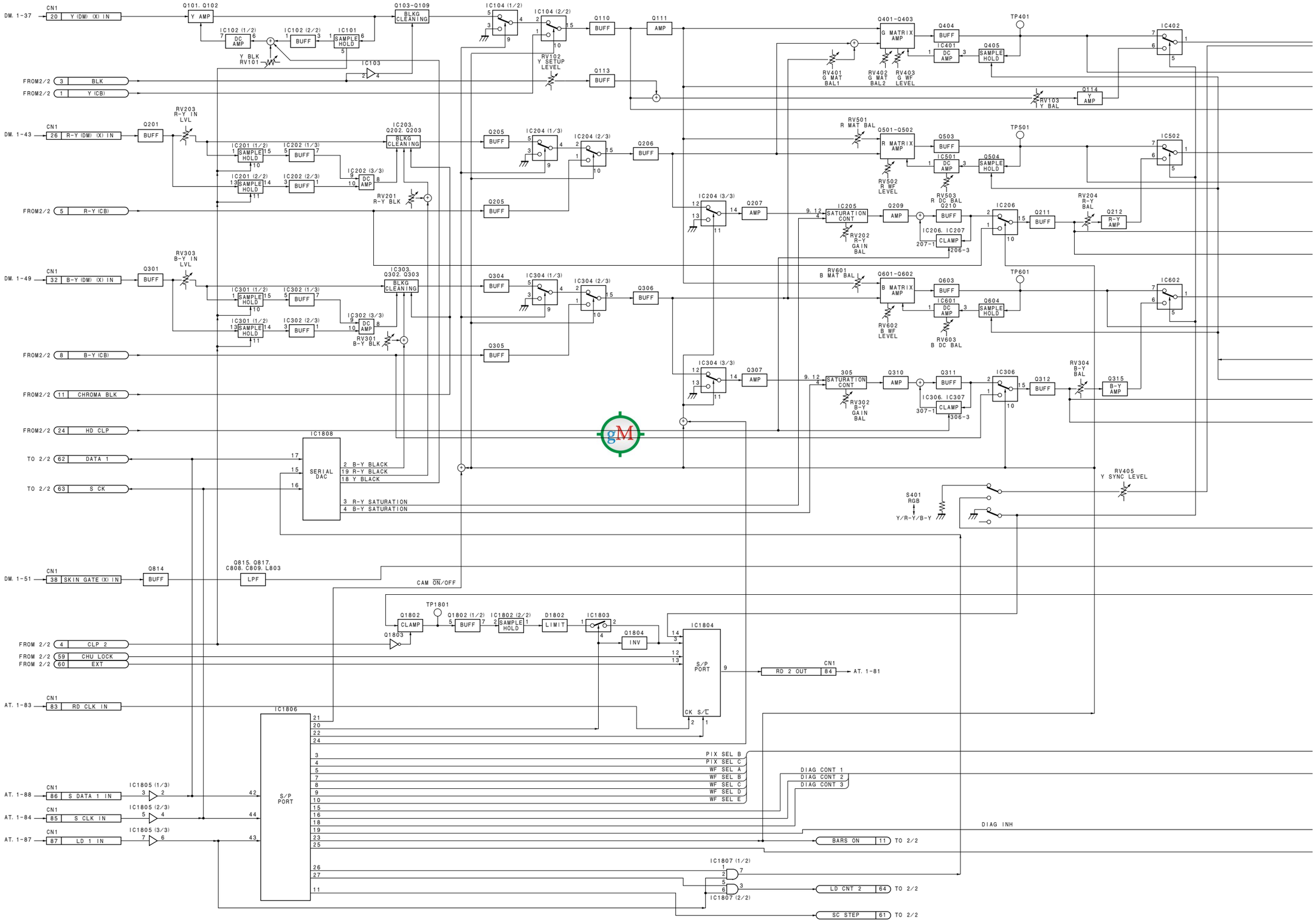
CN1
DM. 1-37
20 Y (DM) (X) IN
Q101, Q102
Y AMP
IC102 (1/2)
DC AMP
IC102 (2/3)
BUFF
IC101
SAMPLE HOLD
Y BLK RV101
IC103
Q103-Q109
BLKG CLEANING
IC104 (1/2)
IC104 (2/3)
Q110
BUFF
Q111
AMP
RV102 Y SETUP LEVEL
Q113
FROM2/2 3 BLK
FROM2/2 1 Y (CB)
Q401-Q403
G MATRIX AMP
Q404
IC401
Q405
TP401
RV401 G MAT BAL1
RV402 G MAT BAL2
RV403 G WF LEVEL
IC402
RV103 I Y BAL
Q114
Y AMP
DM. 1-43
26 R-Y (DM) (X) IN
Q201
RV203 R-Y IN LVL
IC201 (1/2)
IC202 (1/3)
IC202 (2/3)
IC202 (3/3)
IC203, Q202, Q203
RV201 R-Y BLK
FROM2/2 5 R-Y (CB)
Q205
IC204 (1/3)
IC204 (2/3)
Q206
RV501 R MAT BAL
Q501-Q502
R MATRIX AMP
Q503
IC501
Q504
TP501
RV502 R WF LEVEL
RV503 R DC BAL
IC502
IC204 (3/3)
Q207
AMP
IC205
SATURATION CONT
Q209
AMP
Q210
IC206
Q211
BUFF
RV204 R-Y BAL
Q212
R-Y AMP
RV202 R-Y GAIN BAL
IC206, IC207
CLAMP
207-1
206-3
DM. 1-49
32 B-Y (DM) (X) IN
Q301
RV303 B-Y IN LVL
IC301 (1/2)
IC302 (1/3)
IC302 (2/3)
IC302 (3/3)
IC303, Q302, Q303
RV301 B-Y BLK
FROM2/2 8 B-Y (CB)
Q304
IC304 (1/3)
IC304 (2/3)
Q306
Q305
RV601 B MAT BAL
Q601-Q602
B MATRIX AMP
Q603
IC601
Q604
TP601
RV602 B WF LEVEL
RV603 B DC BAL
IC602
IC304 (3/3)
Q307
AMP
305
SATURATION CONT
Q310
AMP
Q311
IC306
Q312
BUFF
RV304 B-Y BAL
Q315
B-Y AMP
RV302 B-Y GAIN BAL
IC306, IC307
CLAMP
307-1
306-3
FROM2/2 11 CHROMA BLK
FROM2/2 24 HD CLP
TO 2/2 62 DATA 1
TO 2/2 63 S CK
IC1808
SERIAL DAC
2 B-Y BLACK
19 R-Y BLACK
18 Y BLACK
3 R-Y SATURATION
4 B-Y SATURATION
RV405 Y SYNC LEVEL
S401 RGB
Y/R-Y/B-Y
DM. 1-51
38 SKIN GATE (X) IN
Q814
BUFF
Q815, Q817, C808, C809, L803
LPF
CAM ON/OFF
TP1801
Q1802
CLAMP
Q1802 (1/2)
BUFF
IC1802 (2/2)
SAMPLE HOLD
D1802
LIMIT
IC1803
Q1803
Q1804
INV
IC1804
S/P PORT
RD 2 OUT 84
AT. 1-81
FROM 2/2 4 CLP 2
FROM 2/2 59 CHU LOCK
FROM 2/2 60 EXT
AT. 1-83
83 RD CLK IN
IC1806
S/P PORT
CK S/C
PIX SEL B
PIX SEL C
WF SEL A
WF SEL B
WF SEL C
WF SEL D
WF SEL E
DIAG CONT 1
DIAG CONT 2
DIAG CONT 3
DIAG INH
AT. 1-88
86 S DATA 1 IN
IC1805 (1/3)
AT. 1-84
85 S CLK IN
IC1805 (2/3)
AT. 1-87
87 LD 1 IN
IC1805 (3/3)
BARS ON 11 TO 2/2
IC1807 (1/2)
IC1807 (2/2)
LD CNT 2 64 TO 2/2
SC STEP 61 TO 2/2

VA-175 (1/2) Block Diagram

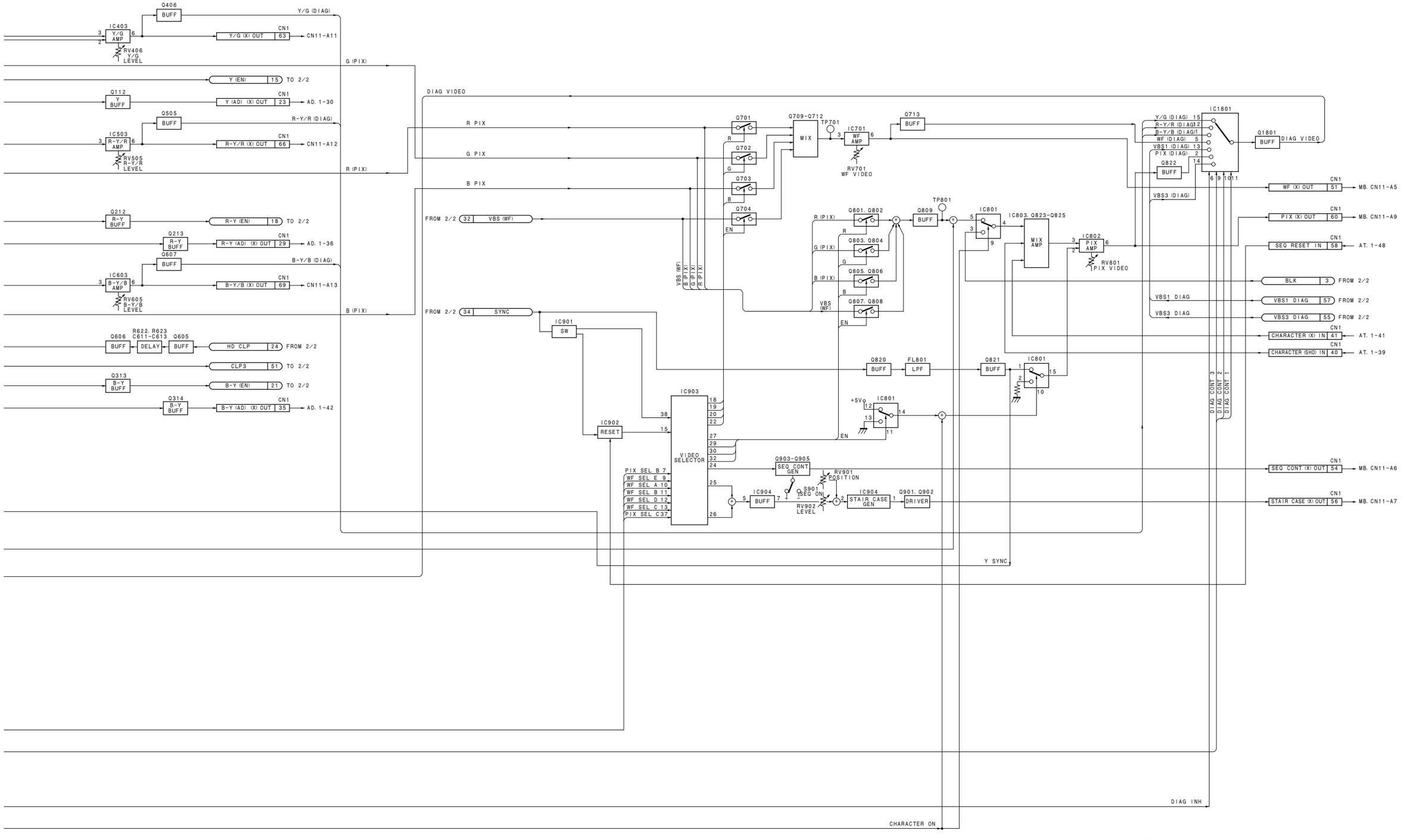

VA-175 (1/2)

CCU-550/550P

CCU550-VA175UC (1/2) BLOCK/M#1, #2

3-7

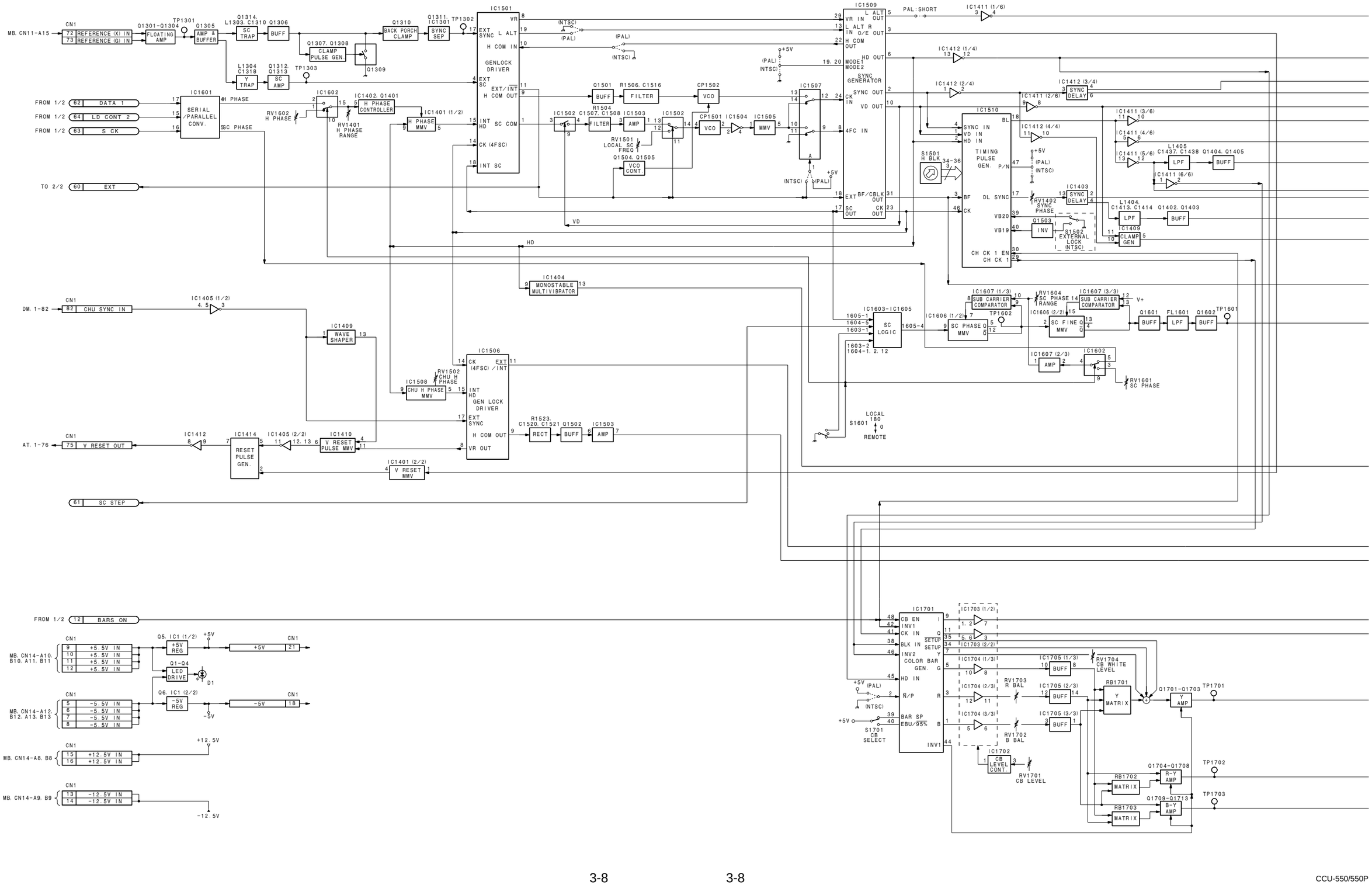
CN1
MB. CN11-A15
72 REFERENCE (X) IN
73 REFERENCE (G) IN
Q1301-Q1304 FLOATING AMP
TP1301
Q1305 AMP & BUFFER
Q1314. L1303. C1310 Q1306 SC TRAP BUFF
Q1307. Q1308 CLAMP PULSE GEN
Q1309
Q1310 BACK PORCH CLAMP
Q1311. IC1301 SYNC SEP
TP1302
L1304 C1318 Y TRAP
Q1312. Q1313 SC AMP
TP1303
IC1501
VR
EXT SYNC L ALT
H COM IN
GENLOCK DRIVER
EXT SC
EXT/INT H COM OUT
INT HD SC COM
CK (4FSC)
INT SC
(NTSC)
(PAL)
+5V
IC1509
L ALT IN
VR IN
L ALT R IN O/E
H COM OUT
HD OUT
MODE1 MODE2
SYNC GENERATOR
SYNC OUT
CK IN
VD OUT
4FC IN
EXT BF/CBLK OUT
SC OUT CK OUT
PAL: SHORT
IC1411 (1/6)
IC1412 (1/4)
IC1412 (2/4)
IC1412 (3/4) SYNC DELAY
IC1411 (2/6)
IC1411 (3/6)
IC1411 (4/6)
IC1411 (5/6)
IC1411 (6/6)
L1405 C1437. C1438 Q1404. Q1405 LPF BUFF
IC1510
SYNC IN
VD IN
HD IN
TIMING PULSE GEN. P/N
BL
DL SYNC
CK
VB20
VB19
CH CK 1 EN
CH CK 1
S1501 H BLK
IC1403 SYNC DELAY
RV1402 SYNC PHASE
Q1503 INV
S1502 EXTERNAL LOCK (NTSC)
L1404. C1413. C1414 Q1402. Q1403 LPF BUFF
IC1409 CLAMP GEN
FROM 1/2 62 DATA 1
FROM 1/2 64 LD CONT 2
FROM 1/2 63 S CK
IC1601 SERIAL /PARALLEL CONV.
H PHASE
SC PHASE
IC1602
RV1602 H PHASE
RV1401 H PHASE RANGE
IC1402. Q1401 H PHASE CONTROLLER
IC1401 (1/2) H PHASE MMV
TO 2/2 60 EXT
Q1501 BUFF
R1506. C1516 FILTER
CP1502 VCO
IC1502 C1507. C1508 R1504 FILTER
IC1503 AMP
RV1501 LOCAL SC FREQ
Q1504. Q1505 VCO CONT
IC1502
CP1501 VCO
IC1504
IC1505 MMV
IC1507
VD
HD
IC1404 MONOSTABLE MULTIVIBRATOR
CN1
DM. 1-82
82 CHU SYNC IN
IC1405 (1/2)
IC1409 WAVE SHAPER
IC1506
CK (4FSC) EXT/INT
INT HD GEN LOCK DRIVER
EXT SYNC
H COM OUT
VR OUT
IC1508 CHU H PHASE MMV
RV1502 CHU H PHASE
R1523. C1520. C1521 Q1502 RECT BUFF
IC1503 AMP
CN1
AT. 1-76
75 V RESET OUT
IC1412
IC1414 RESET PULSE GEN.
IC1405 (2/2)
IC1410 V RESET PULSE MMV
IC1401 (2/2) V RESET MMV
61 SC STEP
IC1603-IC1605 SC LOGIC
1605-1
1604-5
1603-1
1603-2
1604-1. 2. 12
1605-4
IC1606 (1/2) SC PHASE MMV
TP1602
IC1606 (2/2) SC FINE MMV
IC1607 (1/3) SUB CARRIER COMPARATOR
RV1604 SC PHASE RANGE
IC1607 (3/3) SUB CARRIER COMPARATOR
V+
Q1601 BUFF
FL1601 LPF
Q1602 BUFF
TP1601
IC1607 (2/3) AMP
IC1602
RV1601 SC PHASE
S1601 LOCAL 180 0 REMOTE
FROM 1/2 12 BARS ON
CN1
MB. CN14-A10. B10. A11. B11
9 +5.5V IN
10 +5.5V IN
11 +5.5V IN
12 +5.5V IN
Q5. IC1 (1/2) +5V REG
+5V
CN1 21
Q1-Q4 LED DRIVE
D1
MB. CN14-A12. B12. A13. B13
5 -5.5V IN
6 -5.5V IN
7 -5.5V IN
8 -5.5V IN
Q6. IC1 (2/2) -5V REG
-5V
CN1 18
MB. CN14-A8. B8
15 +12.5V IN
16 +12.5V IN
+12.5V
MB. CN14-A9. B9
13 -12.5V IN
14 -12.5V IN
-12.5V
IC1701
CB EN
INV1
CK IN
BLK IN
INV2
COLOR BAR GEN.
HD IN
R/P
BAR SP EBU/95%
INV1
SETUP
SETUP
Y
G
R
B
IC1703 (1/2)
IC1703 (2/2)
IC1704 (1/3)
IC1704 (2/3)
IC1704 (3/3)
IC1705 (1/3) BUFF
IC1705 (2/3) BUFF
IC1705 (3/3) BUFF
RV1704 CB WHITE LEVEL
RV1703 R BAL
RV1702 B BAL
RB1701 Y MATRIX
Q1701-Q1703 Y AMP
TP1701
S1701 CB SELECT
IC1702 CB LEVEL CONT
RV1701 CB LEVEL
RB1702 MATRIX
Q1704-Q1708 R-Y AMP
TP1702
RB1703 MATRIX
Q1709-Q1713 B-Y AMP
TP1703

VA-175 (2/2) Block Diagram

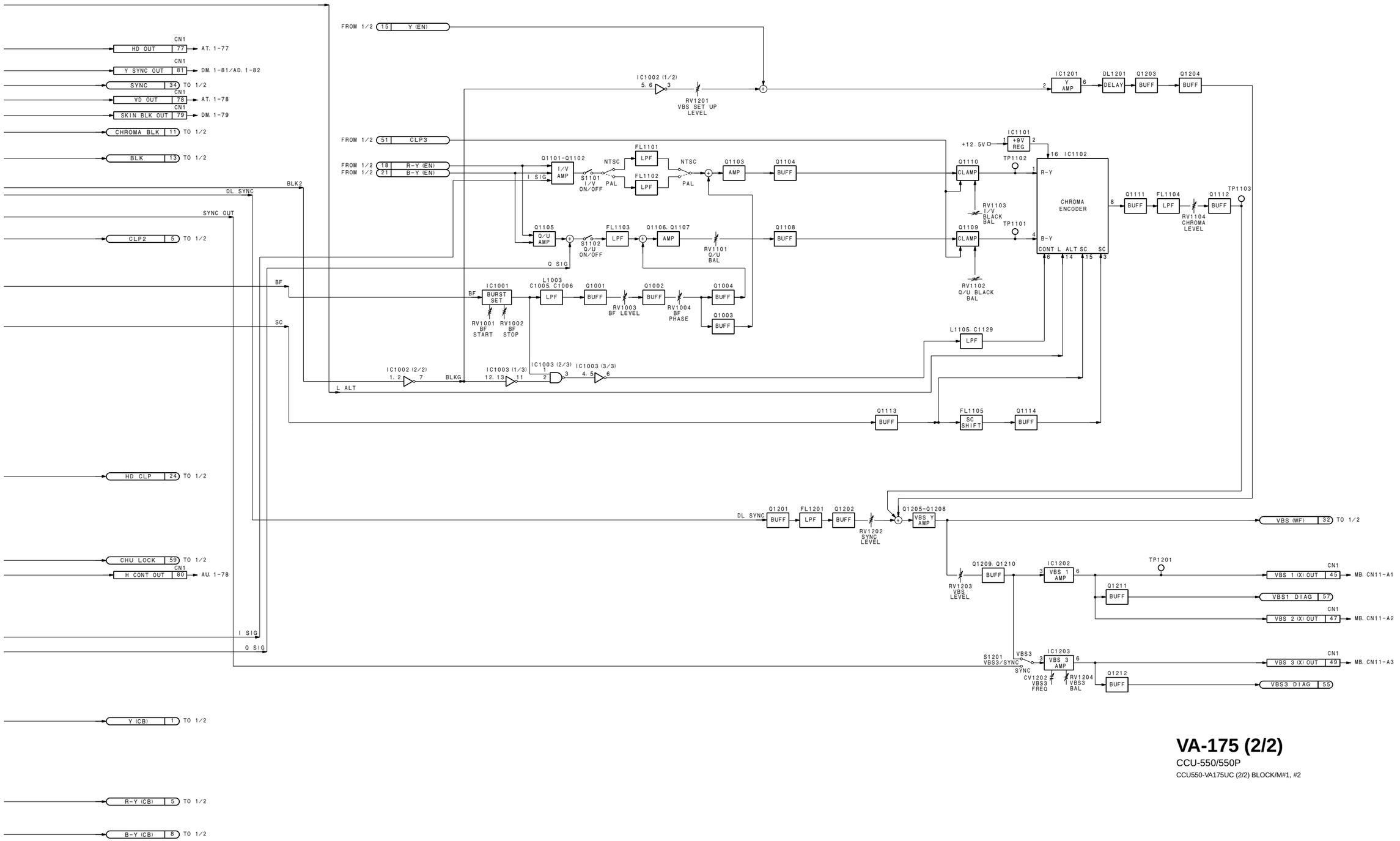

VA-175 (2/2)

CCU-550/550P

CCU550-VA175UC (2/2) BLOCK/M#1, #2

3-9

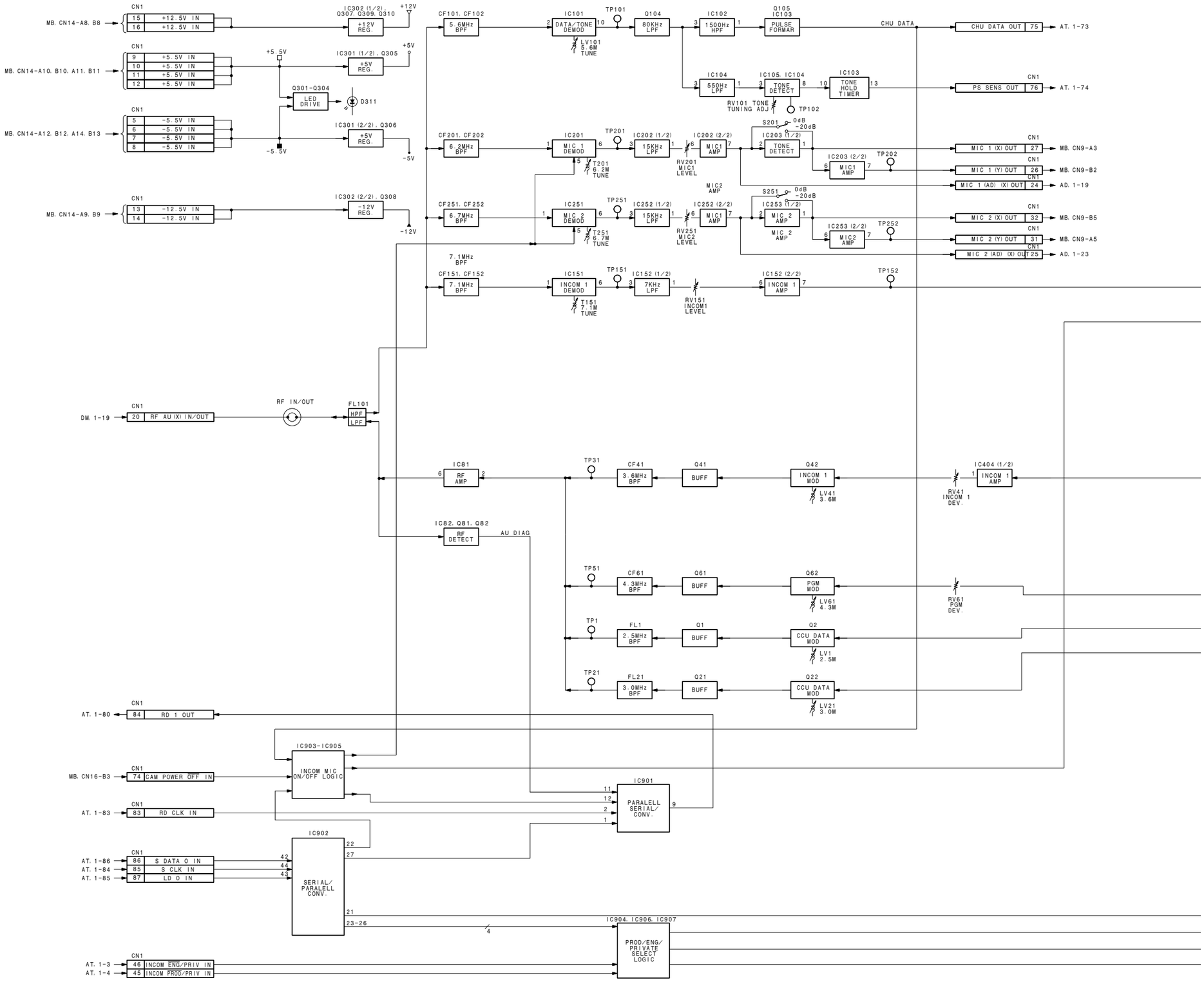
CN1
MB. CN14-A8. B8
15 +12.5V IN
16 +12.5V IN
IC302 (1/2) Q307. Q309. Q310
+12V REG.
+12V
MB. CN14-A10. B10. A11. B11
9 +5.5V IN
10 +5.5V IN
11 +5.5V IN
12 +5.5V IN
+5.5V
IC301 (1/2). Q305
+5V REG.
+5V
Q301-Q304
LED DRIVE
D311
MB. CN14-A12. B12. A14. B13
5 -5.5V IN
6 -5.5V IN
7 -5.5V IN
8 -5.5V IN
-5.5V
IC301 (2/2). Q306
+5V REG.
-5V
MB. CN14-A9. B9
13 -12.5V IN
14 -12.5V IN
IC302 (2/2). Q308
-12V REG.
-12V
CF101. CF102
5.6MHz BPF
IC101
DATA/TONE DEMOD
LV101 5.6M TUNE
TP101
Q104
80KHz LPF
IC102
1500Hz HPF
Q105 IC103
PULSE FORMAR
CHU DATA
CHU DATA OUT 75
AT. 1-73
IC104
550Hz LPF
IC105. IC104
TONE DETECT
IC103
TONE HOLD TIMER
RV101 TONE TUNING ADJ
TP102
PS SENS OUT 76
AT. 1-74
CF201. CF202
6.2MHz BPF
IC201
MIC 1 DEMOD
T201 6.2M TUNE
TP201
IC202 (1/2)
15KHz LPF
IC202 (2/2)
MIC1 AMP
RV201 MIC1 LEVEL
S201
0dB
-20dB
IC203 (1/2)
TONE DETECT
IC203 (2/2)
MIC1 AMP
TP202
MIC 1 (X) OUT 27
MB. CN9-A3
MIC 1 (Y) OUT 26
MB. CN9-B2
MIC 1 (AD) (X) OUT 24
AD. 1-19
CF251. CF252
6.7MHz BPF
IC251
MIC 2 DEMOD
T251 6.7M TUNE
TP251
IC252 (1/2)
15KHz LPF
IC252 (2/2)
MIC1 AMP
RV251 MIC2 LEVEL
MIC2 AMP
S251
0dB
-20dB
IC253 (1/2)
MIC 2 AMP
IC253 (2/2)
MIC2 AMP
TP252
MIC 2 (X) OUT 32
MB. CN9-B5
MIC 2 (Y) OUT 31
MB. CN9-A5
MIC 2 (AD) (X) OUT 25
AD. 1-23
7.1MHz BPF
CF151. CF152
7.1MHz BPF
IC151
INCOM 1 DEMOD
T151 7.1M TUNE
TP151
IC152 (1/2)
7KHz LPF
RV151 INCOM1 LEVEL
IC152 (2/2)
INCOM 1 AMP
TP152
DM. 1-19
CN1
20 RF AU (X) IN/OUT
RF IN/OUT
FL101
HPF
LPF
IC81
RF AMP
TP31
CF41
3.6MHz BPF
Q41
BUFF
Q42
INCOM 1 MOD
LV41 3.6M
RV41 INCOM 1 DEV.
IC404 (1/2)
INCOM 1 AMP
IC82. Q81. Q82
RF DETECT
AU DIAG
TP51
CF61
4.3MHz BPF
Q61
BUFF
Q62
PGM MOD
LV61 4.3M
RV61 PGM DEV.
TP1
FL1
2.5MHz BPF
Q1
BUFF
Q2
CCU DATA MOD
LV1 2.5M
TP21
FL21
3.0MHz BPF
Q21
BUFF
Q22
CCU DATA MOD
LV21 3.0M
AT. 1-80
84 RD 1 OUT
IC903-IC905
INCOM MIC ON/OFF LOGIC
MB. CN16-B3
74 CAM POWER OFF IN
AT. 1-83
83 RD CLK IN
IC901
PARALELL SERIAL/ CONV.
IC902
SERIAL/ PARALELL CONV.
AT. 1-86
AT. 1-84
AT. 1-85
86 S DATA O IN
85 S CLK IN
87 LD O IN
IC904. IC906. IC907
PROD/ENG/ PRIVATE SELECT LOGIC
AT. 1-3
AT. 1-4
46 INCOM ENG/PRIV IN
45 INCOM PROD/PRIV IN

http://getMANUAL.com

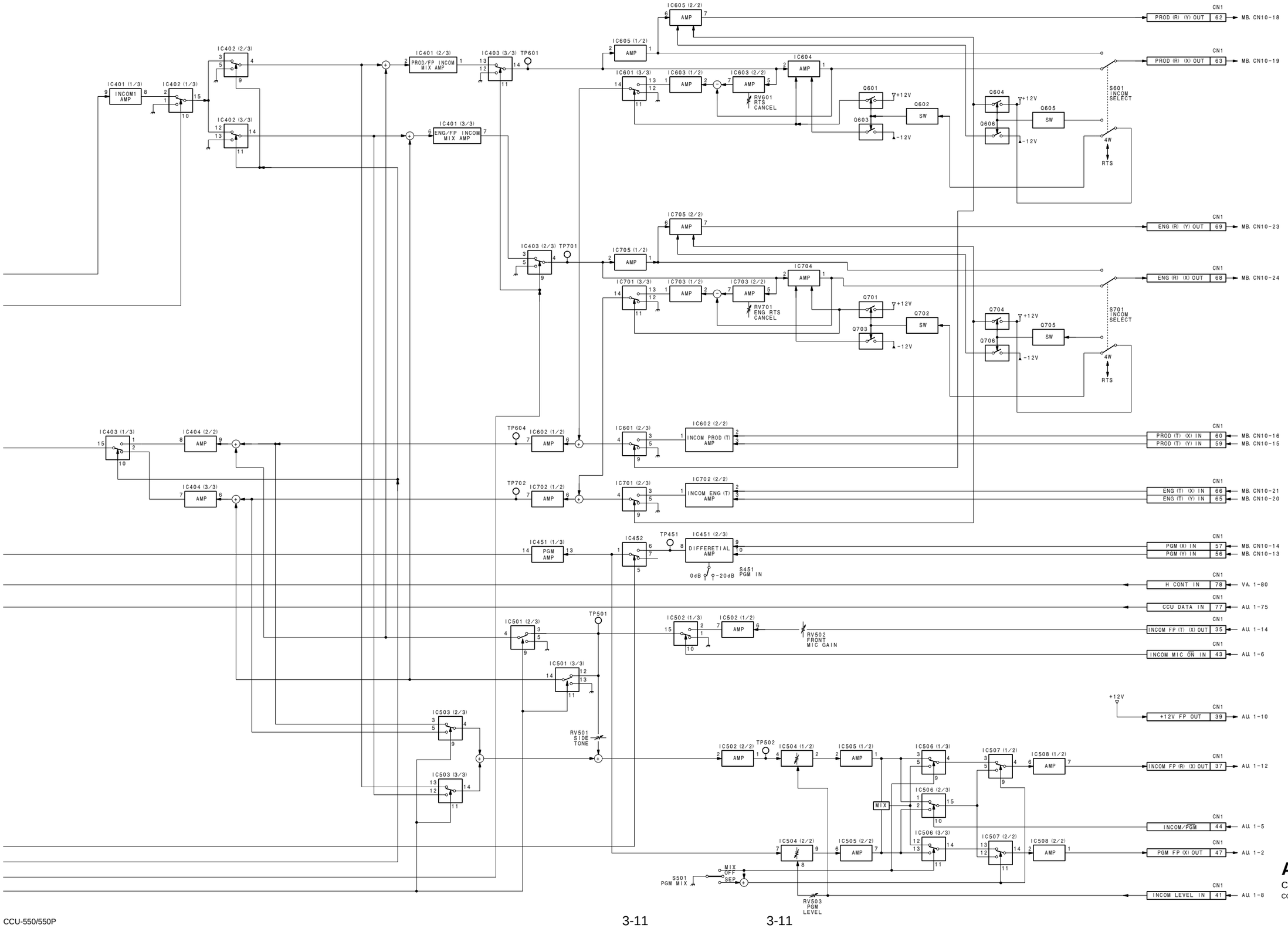

AU-231
CCU-550/550P
CCU550-AU231 BLOCK/M#1, #2

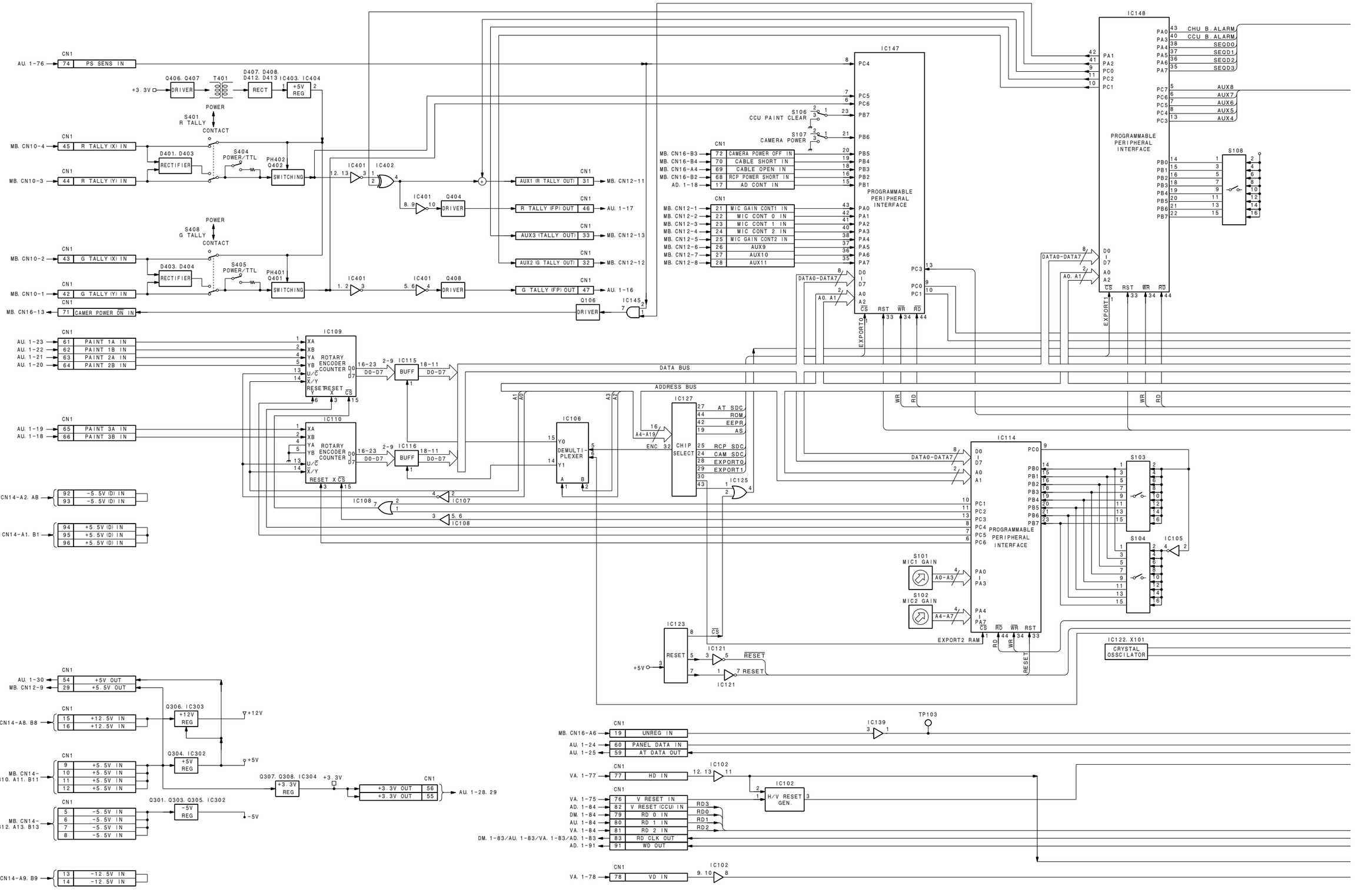
CN1
AU. 1-76 74 PS SENS IN
+3. 3V
Q406. Q407 DRIVER
T401
D407. D408. D412. D413 RECT
IC403. IC404 +5V REG
POWER
S401 R TALLY CONTACT
MB. CN10-4 45 R TALLY (X) IN
MB. CN10-3 44 R TALLY (Y) IN
D401. D403 RECTIFIER
S404 POWER/TTL
PH402 Q402 SWITCHING
IC401 IC402
AUX1 (R TALLY OUT) 31 MB. CN12-11
R TALLY (FP) OUT 46 AU. 1-17
AUX3 (TALLY OUT) 33 MB. CN12-13
AUX2 (G TALLY OUT) 32 MB. CN12-12
G TALLY (FP) OUT 47 AU. 1-16
S408 G TALLY CONTACT
MB. CN10-2 43 G TALLY (X) IN
MB. CN10-1 42 G TALLY (Y) IN
D403. D404 RECTIFIER
S405 POWER/TTL
PH401 Q401 SWITCHING
Q404 DRIVER
Q408 DRIVER
MB. CN16-13 71 CAMER POWER ON IN
Q106 DRIVER
IC145
IC147
PROGRAMMABLE PERIPHERAL INTERFACE
S106 CCU PAINT CLEAR
S107 CAMERA POWER
MB. CN16-B3 72 CAMERA POWER OFF IN
MB. CN16-B4 70 CABLE SHORT IN
MB. CN16-A4 69 CABLE OPEN IN
MB. CN16-B2 68 RCP POWER SHORT IN
AD. 1-18 17 AD CONT IN
MB. CN12-1 21 MIC GAIN CONT1 IN
MB. CN12-2 22 MIC CONT 0 IN
MB. CN12-3 23 MIC CONT 1 IN
MB. CN12-4 24 MIC CONT 2 IN
MB. CN12-5 25 MIC GAIN CONT2 IN
MB. CN12-6 26 AUX9
MB. CN12-7 27 AUX10
MB. CN12-8 28 AUX11
DATA0-DATA7
A0. A1
EXPORT0
IC148
PROGRAMMABLE PERIPHERAL INTERFACE
CHU B ALARM
CCU B ALARM
SEQD0
SEQD1
SEQD2
SEQD3
AUX8
AUX7
AUX6
AUX5
AUX4
S108
EXPORT1
AU. 1-23 61 PAINT 1A IN
AU. 1-22 62 PAINT 1B IN
AU. 1-21 63 PAINT 2A IN
AU. 1-20 64 PAINT 2B IN
IC109 ROTARY ENCODER COUNTER
BUFF
IC115
AU. 1-19 65 PAINT 3A IN
AU. 1-18 66 PAINT 3B IN
IC110 ROTARY ENCODER COUNTER
IC116
DATA BUS
ADDRESS BUS
IC106 DEMULTI-PLEXER
IC127 CHIP SELECT
AT SDC
ROM
EEPR
AS
RCP SDC
CAM SDC
EXPORT0
EXPORT1
IC125
IC107
IC108
MB. CN14-A2. AB 92 -5. 5V (D) IN 93 -5. 5V (D) IN
MB. CN14-A1. B1 94 +5. 5V (D) IN 95 +5. 5V (D) IN 96 +5. 5V (D) IN
IC114
S103
S104
IC105
S101 MIC1 GAIN
S102 MIC2 GAIN
EXPORT2 RAM
IC123 RESET
IC121
IC122. X101 CRYSTAL OSSCILATOR
AU. 1-30 54 +5V OUT
MB. CN12-9 29 +5. 5V OUT
MB. CN14-A8. B8 15 +12. 5V IN 16 +12. 5V IN
Q306. IC303 +12V REG
+12V
MB. CN14-A10. B10. A11. B11 9 10 11 12 +5. 5V IN
Q304. IC302 +5V REG
+5V
Q307. Q308. IC304 +3. 3V REG
+3. 3V
+3. 3V OUT 56 +3. 3V OUT 55
AU. 1-28. 29
MB. CN14-A12. B12. A13. B13 5 6 7 8 -5. 5V IN
Q301. Q303. Q305. IC302 -5V REG
-5V
MB. CN14-A9. B9 13 -12. 5V IN 14 -12. 5V IN
MB. CN16-A6 19 UNREG IN
AU. 1-24 60 PANEL DATA IN
AU. 1-25 59 AT DATA OUT
IC139
TP103
VA. 1-77 77 HD IN
IC102
H/V RESET GEN.
VA. 1-75 76 V RESET IN
AD. 1-84 82 V RESET (CCU) IN
DM. 1-84 79 RD 0 IN
AU. 1-84 80 RD 1 IN
VA. 1-84 81 RD 2 IN
DM. 1-83/AU. 1-83/VA. 1-83/AD. 1-83 83 RD CLK OUT
AD. 1-91 91 WD OUT
RD3
RD0
RD1
RD2
VA. 1-78 78 VD IN

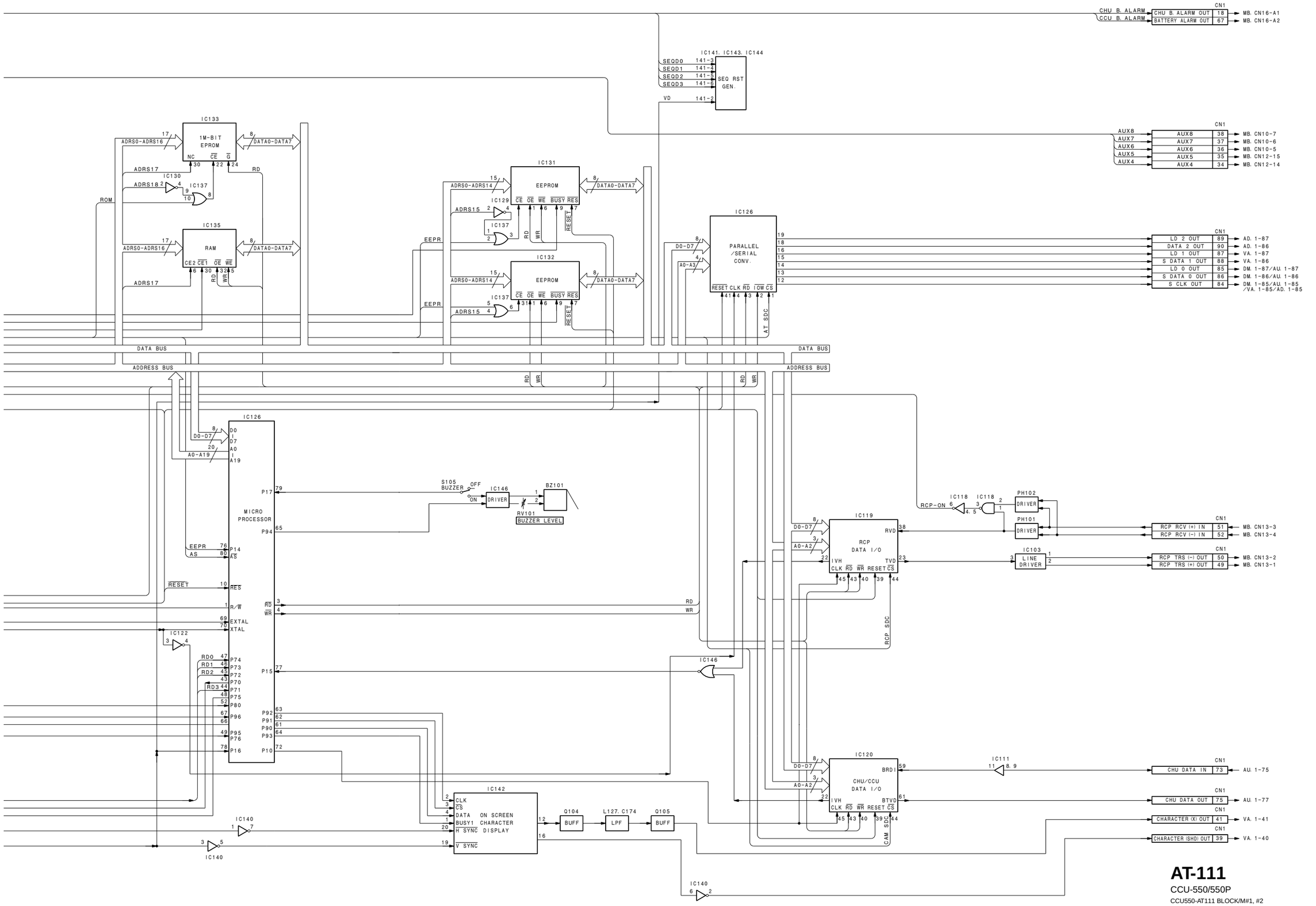

AT-111
CCU-550/550P
CCU550-AT111 BLOCK/M#1, #2

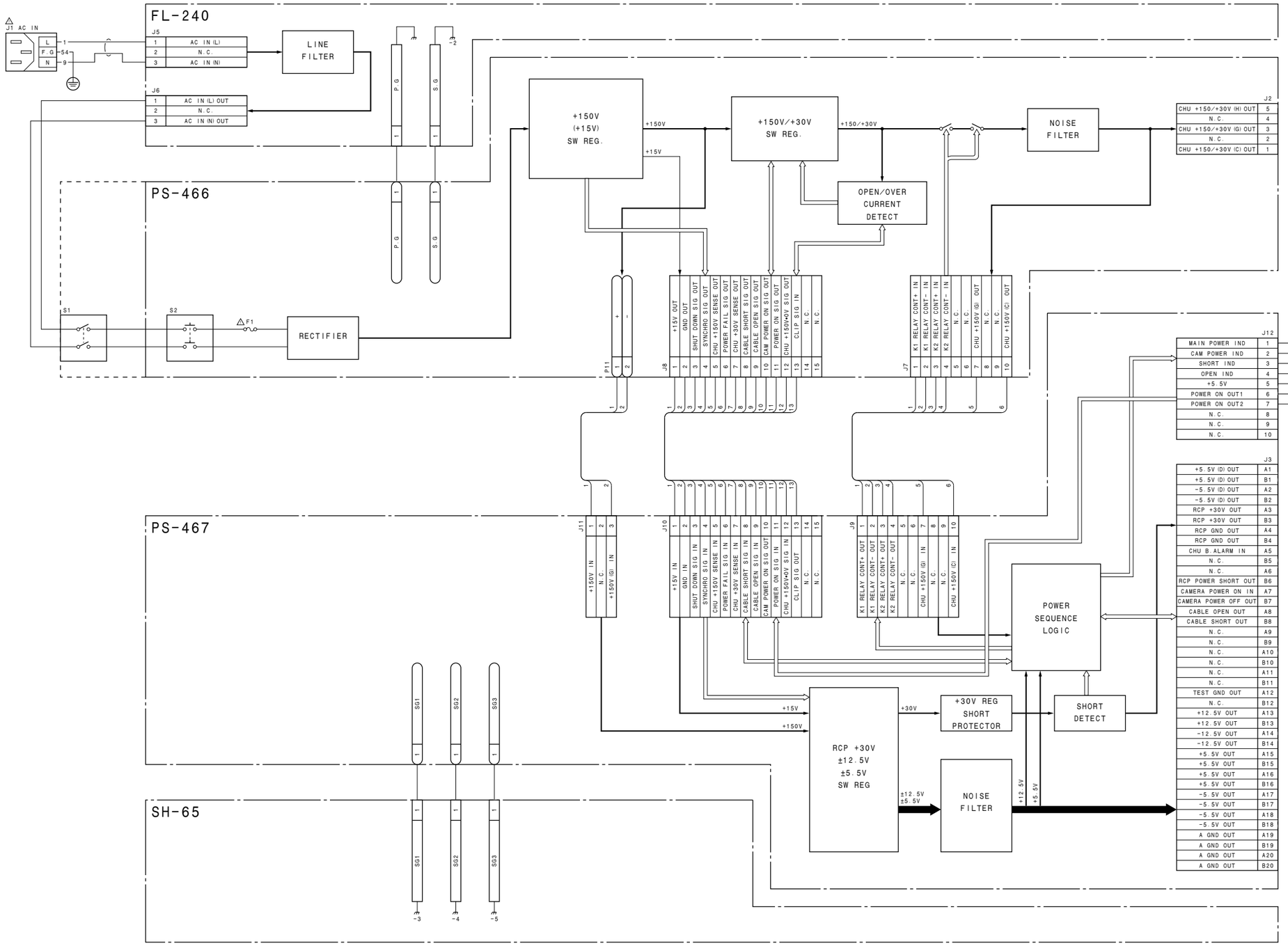

FL-240
PS-466
PS-467
SH-65

CCU-550/550P

CCU550-SW REG BLOCK/M

Section 4
Schematic Diagrams

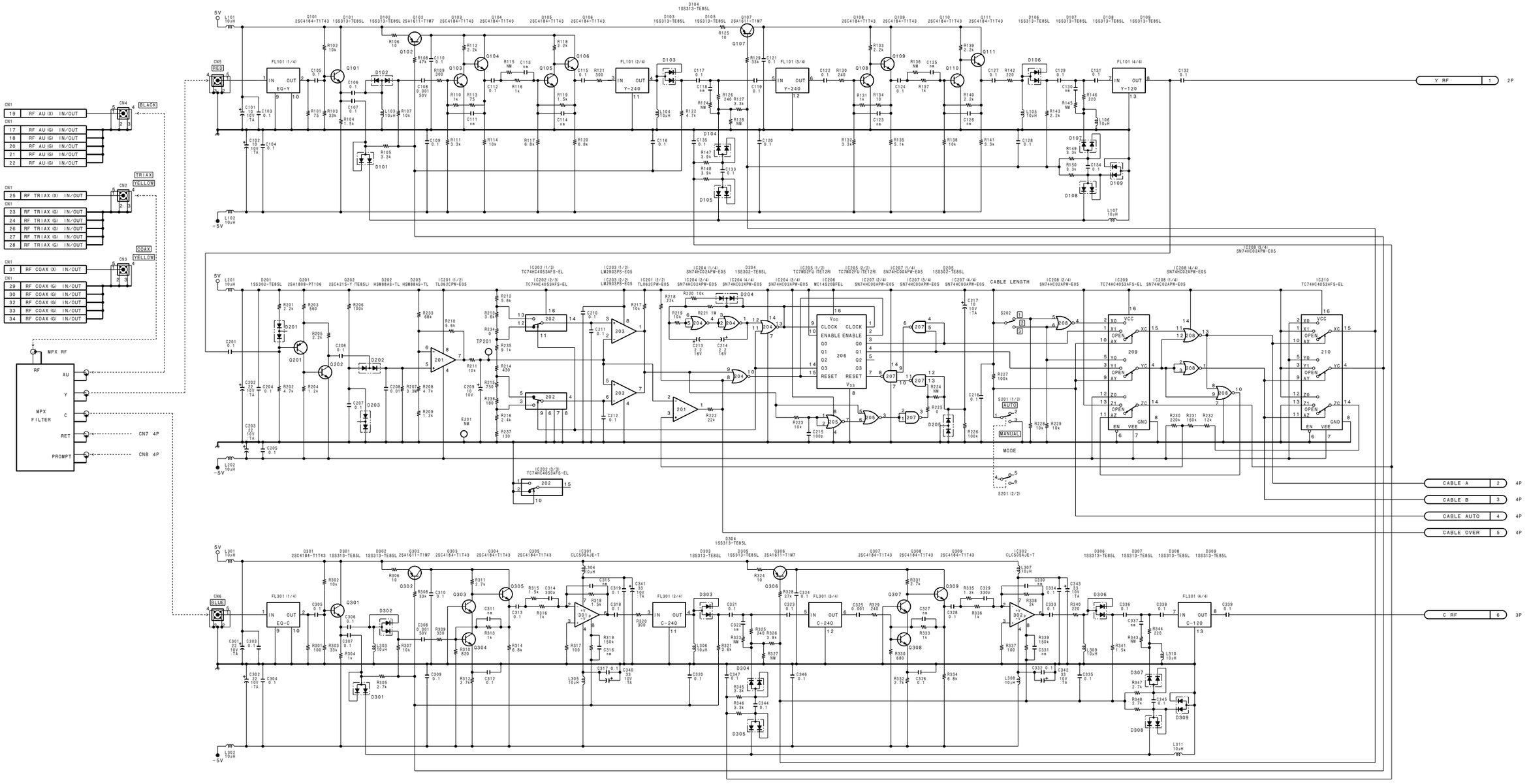

DM-110 (1/4)

BOARD NO. 1-661-623-11

B-¥CCU550-DM110/M-11

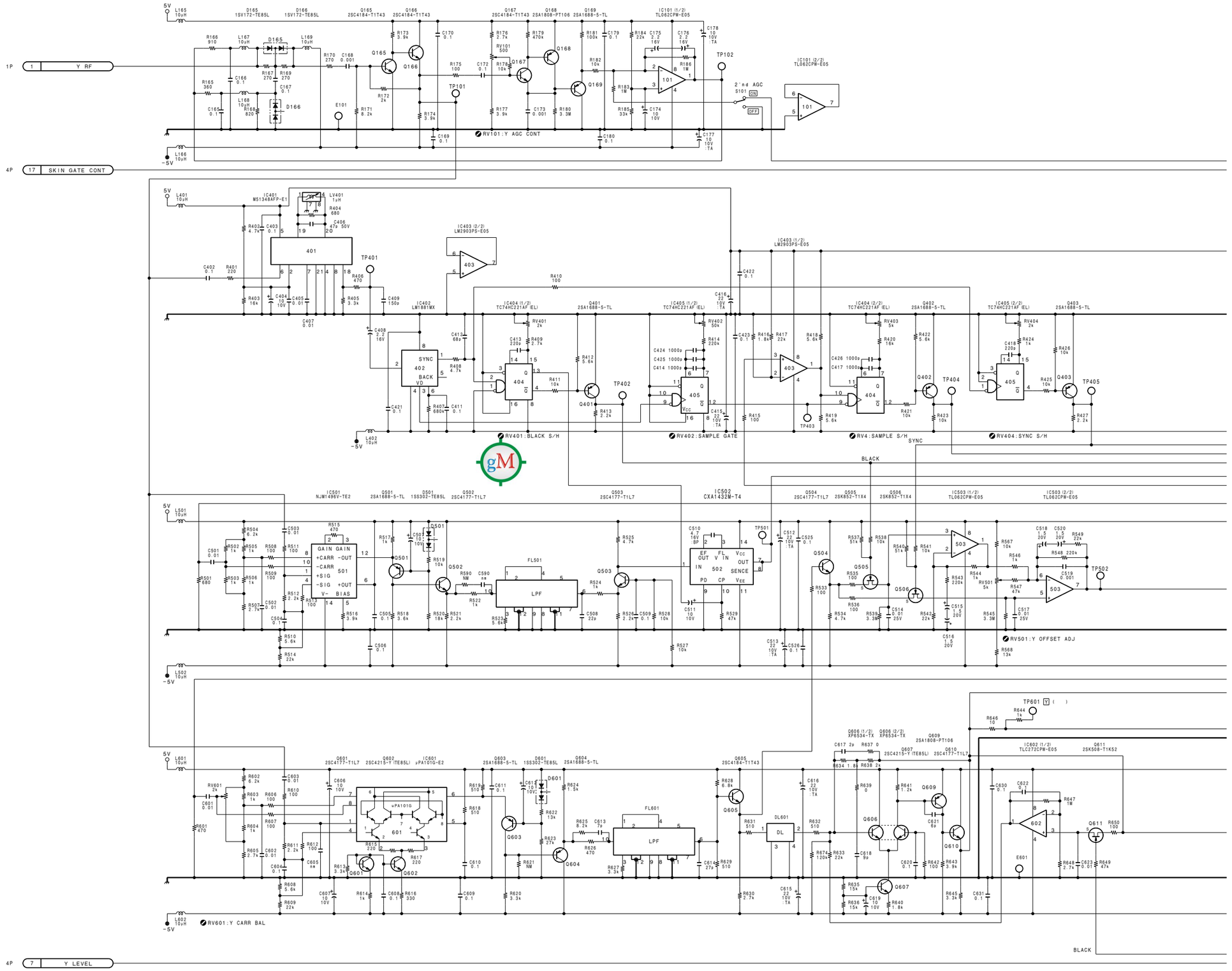
1P
Y RF
4P
SKIN GATE CONT
RV101:Y AGC CONT
2'nd AGC
RV401:BLACK S/H
RV402:SAMPLE GATE
RV4:SAMPLE S/H
RV404:SYNC S/H
SYNC
BLACK
RV501:Y OFFSET ADJ
RV601:Y CARR BAL
4P
Y LEVEL

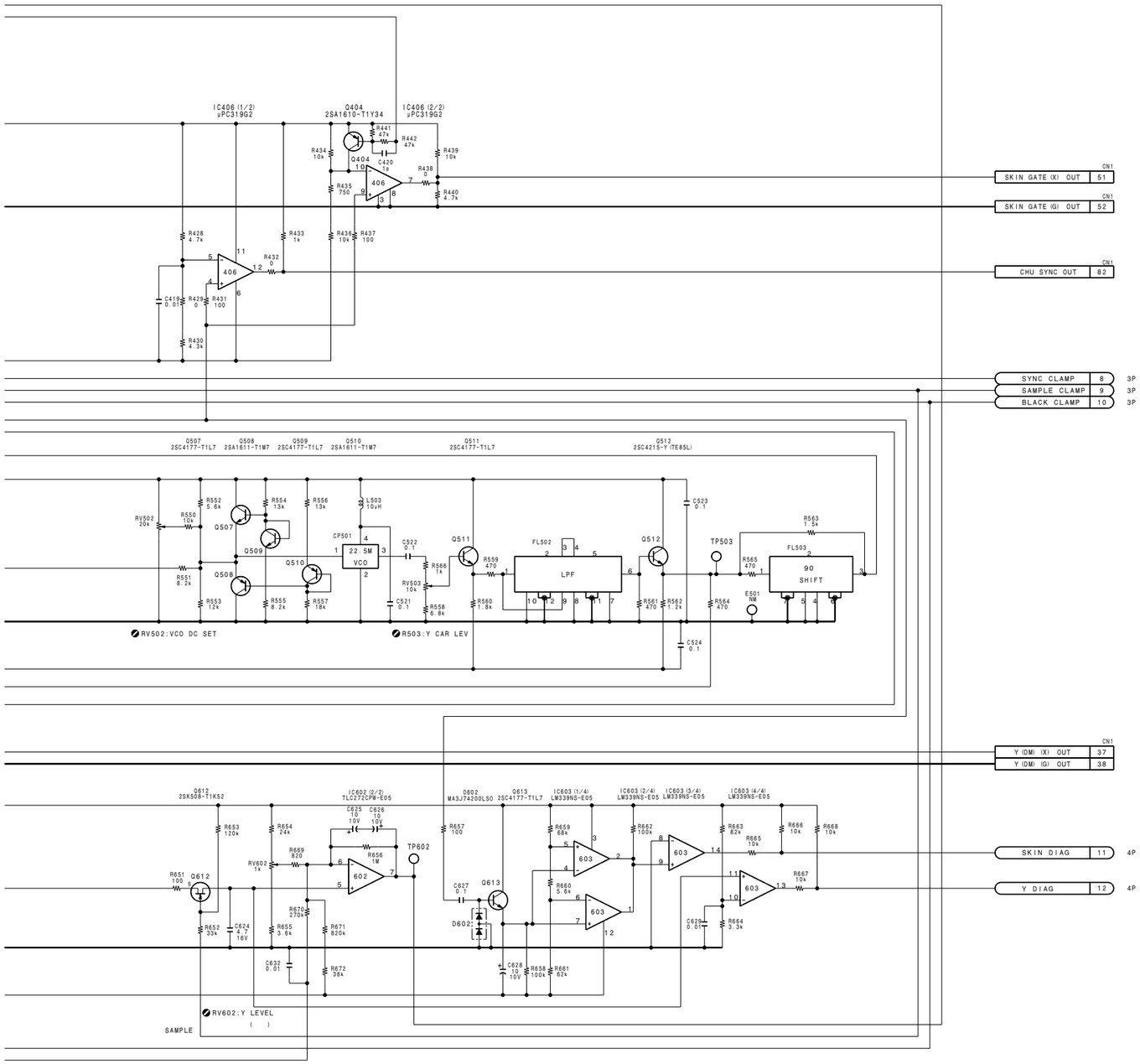

DM-110 (2/4)

BOARD NO. 1-661-623-11

B-¥CCU550-DM110/M-11

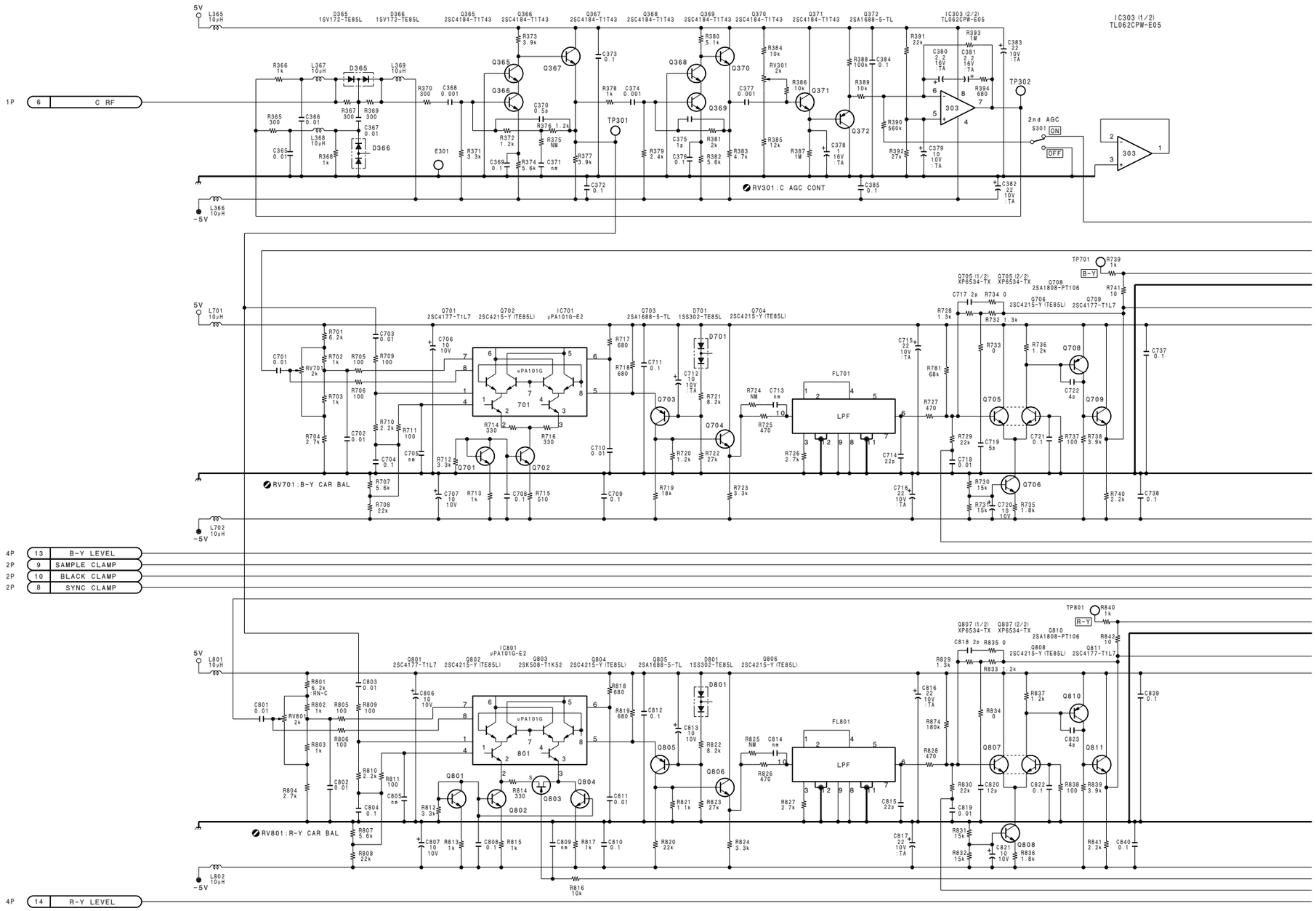
C RF
B-Y LEVEL
SAMPLE CLAMP
BLACK CLAMP
SYNC CLAMP
R-Y LEVEL
RV301 : C AGC CONT
RV701 : B-Y CAR BAL
RV801 : R-Y CAR BAL
2nd AGC
S301
ON
OFF
LPF
FL701
FL801
IC303 (1/2) TL062CPW-E05
IC303 (2/2) TL062CPW-E05
IC701 μPA101G-E2
IC801 μPA101G-E2
μPA101G
701
801
TP301
TP302
TP701
TP801
B-Y
R-Y
5V
-5V

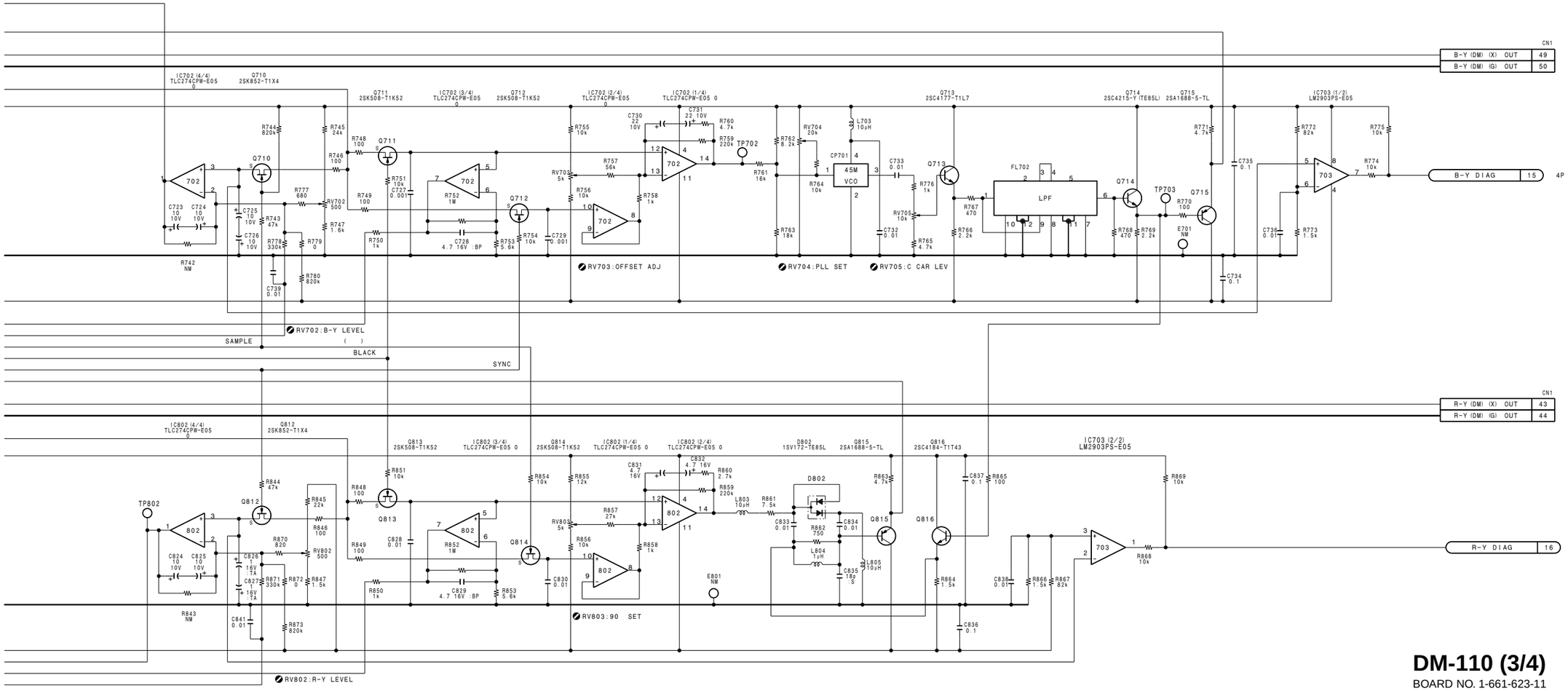

DM-110 (3/4)

BOARD NO. 1-661-623-11

B-¥CCU550-DM110/M-11

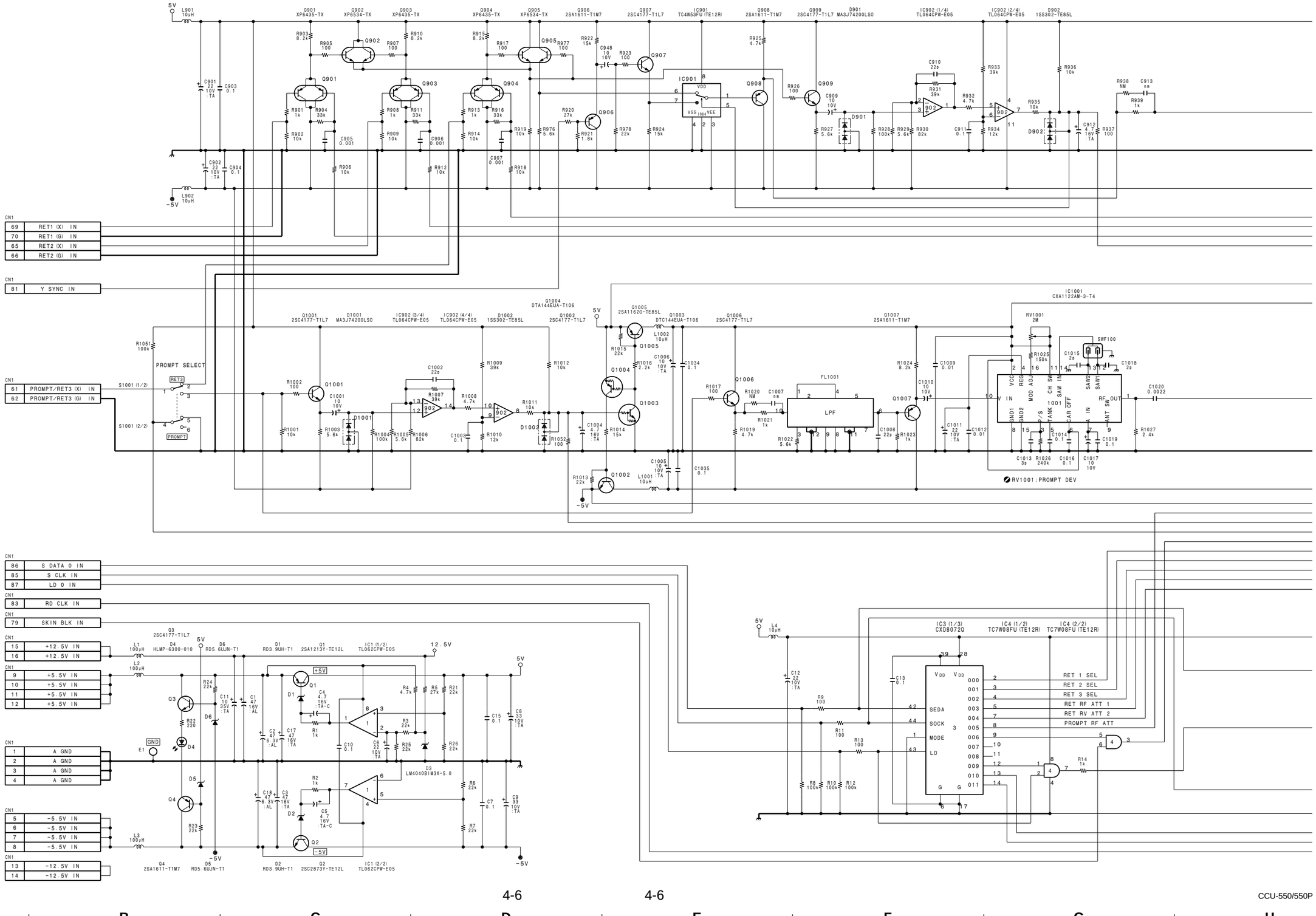
5V
-5V
12.5V
L901 10µH
L902 10µH
Q901 XP6435-TX
Q902 XP6534-TX
Q903 XP6435-TX
Q904 XP6435-TX
Q905 XP6534-TX
Q906 2SA1611-T1M7
Q907 2SC4177-T1L7
IC901 TC4W53FU(TE12R)
Q908 2SA1611-T1M7
Q909 2SC4177-T1L7
D901 MA3J74200LS0
IC902 (1/4) TL064CPW-E05
IC902 (2/4) TL064CPW-E05
D902 1SS302-TE85L
CN1
69 RET1 (X) IN
70 RET1 (G) IN
65 RET2 (X) IN
66 RET2 (G) IN
81 Y SYNC IN
61 PROMPT/RET3 (X) IN
62 PROMPT/RET3 (G) IN
PROMPT SELECT
S1001 (1/2)
S1001 (2/2)
RET3
PROMPT
Q1001 2SC4177-T1L7
D1001 MA3J74200LS0
IC902 (3/4) TL064CPW-E05
IC902 (4/4) TL064CPW-E05
D1002 1SS302-TE85L
Q1002 2SC4177-T1L7
Q1004 DTA144EUA-T106
Q1005 2SA1162G-TE85L
Q1003 DTC144EUA-T106
Q1006 2SC4177-T1L7
Q1007 2SA1611-T1M7
FL1001
LPF
IC1001 CXA1122AN-3-T4
RV1001 2M
SWF100
RV1001 : PROMPT DEV
86 S DATA 0 IN
85 S CLK IN
87 LD 0 IN
83 RD CLK IN
79 SKIN BLK IN
15 +12.5V IN
16 +12.5V IN
9 +5.5V IN
10 +5.5V IN
11 +5.5V IN
12 +5.5V IN
1 A GND
2 A GND
3 A GND
4 A GND
5 -5.5V IN
6 -5.5V IN
7 -5.5V IN
8 -5.5V IN
13 -12.5V IN
14 -12.5V IN
Q3 2SC4177-T1L7
Q4 2SA1611-T1M7
D4 HLMP-6300-010
D6 RD5.6UJN-T1
D5 RD5.6UJN-T1
D1 RD3.9UH-T1
D2 RD3.9UH-T1
Q1 2SA1213Y-TE12L
Q2 2SC2873Y-TE12L
IC1 (1/2) TL062CPW-E05
IC1 (2/2) TL062CPW-E05
D3 LM4040BIM3X-5.0
GND
+5V
-5V
L4 10µH
IC3 (1/3) CXD8072Q
IC4 (1/2) TC7W08FU (TE12R)
IC4 (2/2) TC7W08FU (TE12R)
SEDA
SOCK
MODE
LD
RET 1 SEL
RET 2 SEL
RET 3 SEL
RET RF ATT 1
RET RV ATT 2
PROMPT RF ATT

http://getMANUAL.com

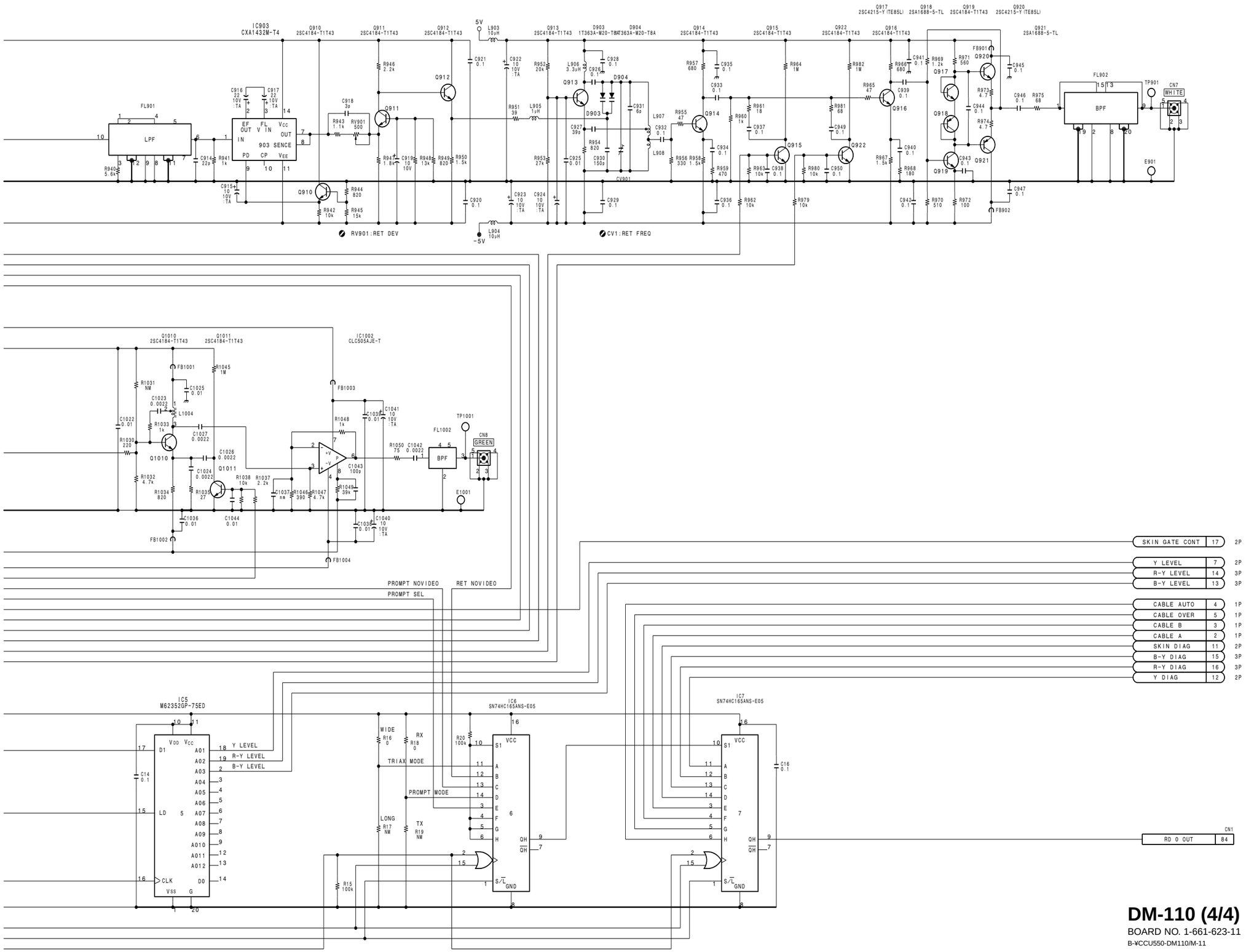

DM-110 (4/4)

BOARD NO. 1-661-623-11

B-¥CCU550-DM110/M-11

VA-175A/175B/175P (1/7)

CCU-550 (UC) : S/N 10101 and Higher
CCU-550 (J) : S/N 30101 and Higher
CCU-550P (CE) : S/N 40101 and Higher

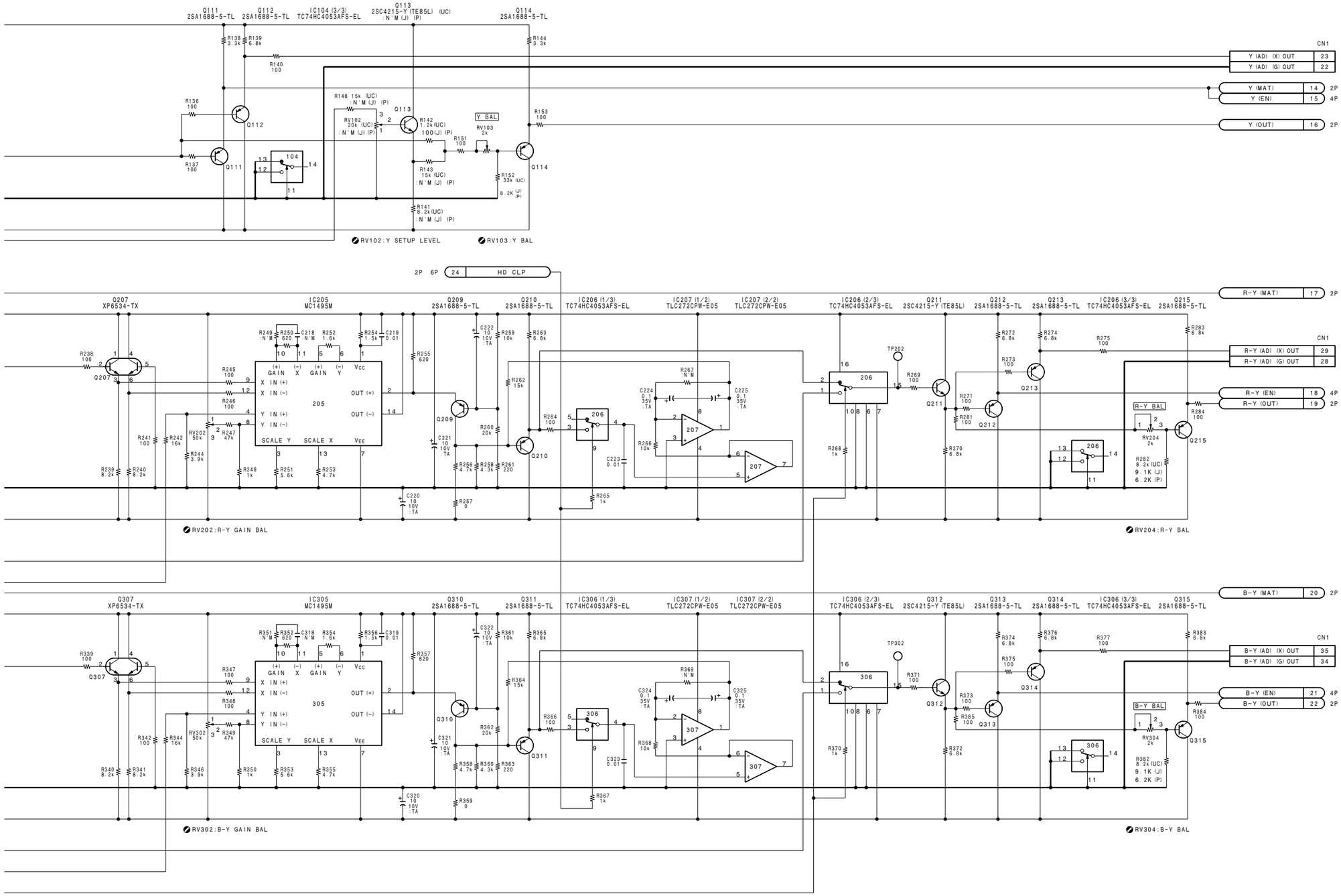

VA-175A/175B/175P (1/7)

BOARD NO. 1-661-625-12

B-¥CCU550-VA175UC/M-12

CCU-550 (UC) : S/N 10101 and Higher
CCU-550 (J) : S/N 30101 and Higher
CCU-550P (CE) : S/N 40101 and Higher

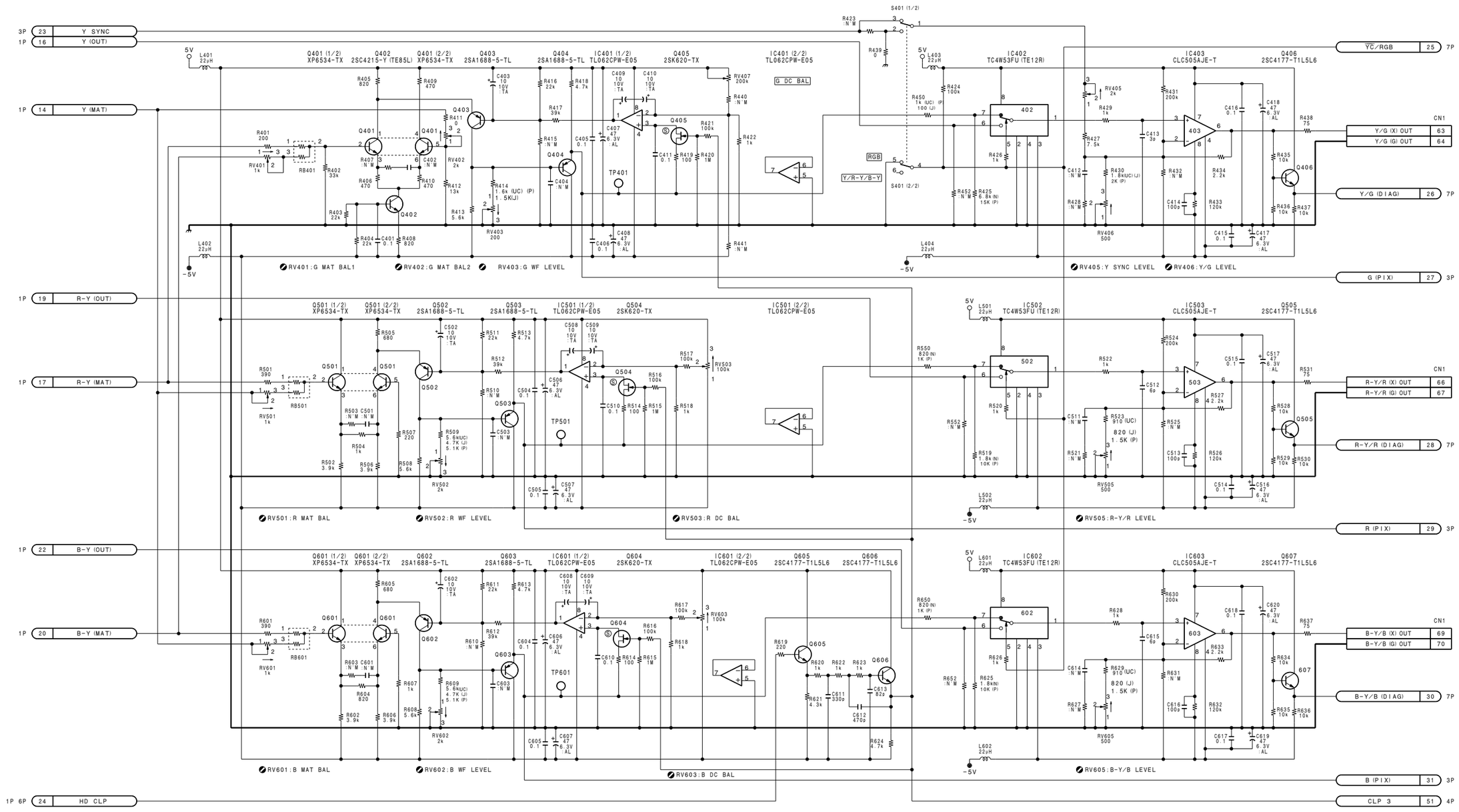

VA-175A/175B/175P (2/7)

BOARD NO. 1-661-625-12

B-¥CCU550-VA175UC/M-12

CCU-550 (UC) : S/N 10101 and Higher
CCU-550 (J) : S/N 30101 and Higher
CCU-550P (CE) : S/N 40101 and Higher

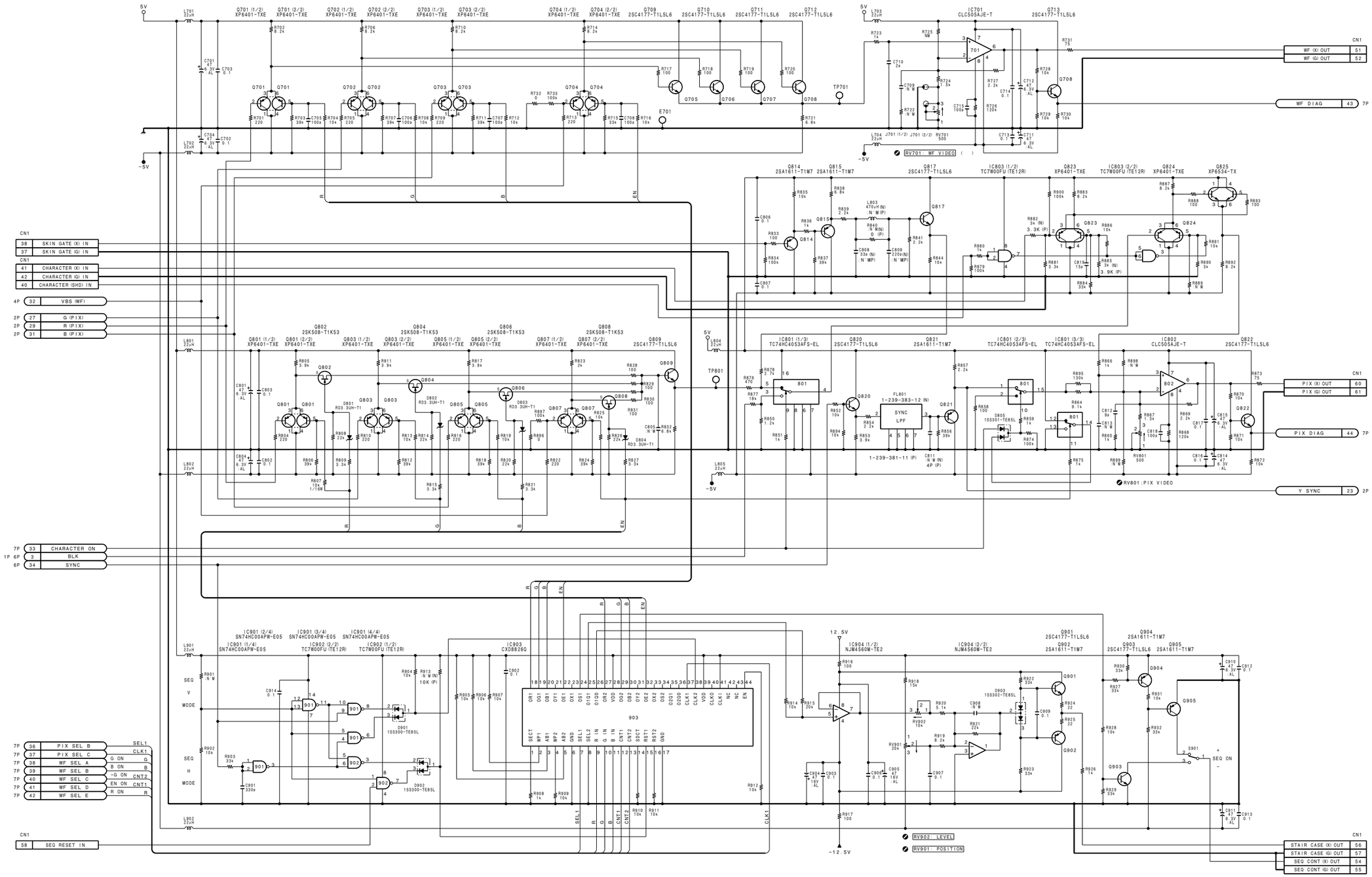

VA-175A/175B/175P (3/7)

BOARD NO. 1-661-625-12

B-¥CCU550-VA175UC/M-12

VA-175A/175B/175P (4/7)

CCU-550 (UC) : S/N 10101 and Higher
CCU-550 (J) : S/N 30101 and Higher
CCU-550P (CE) : S/N 40101 and Higher

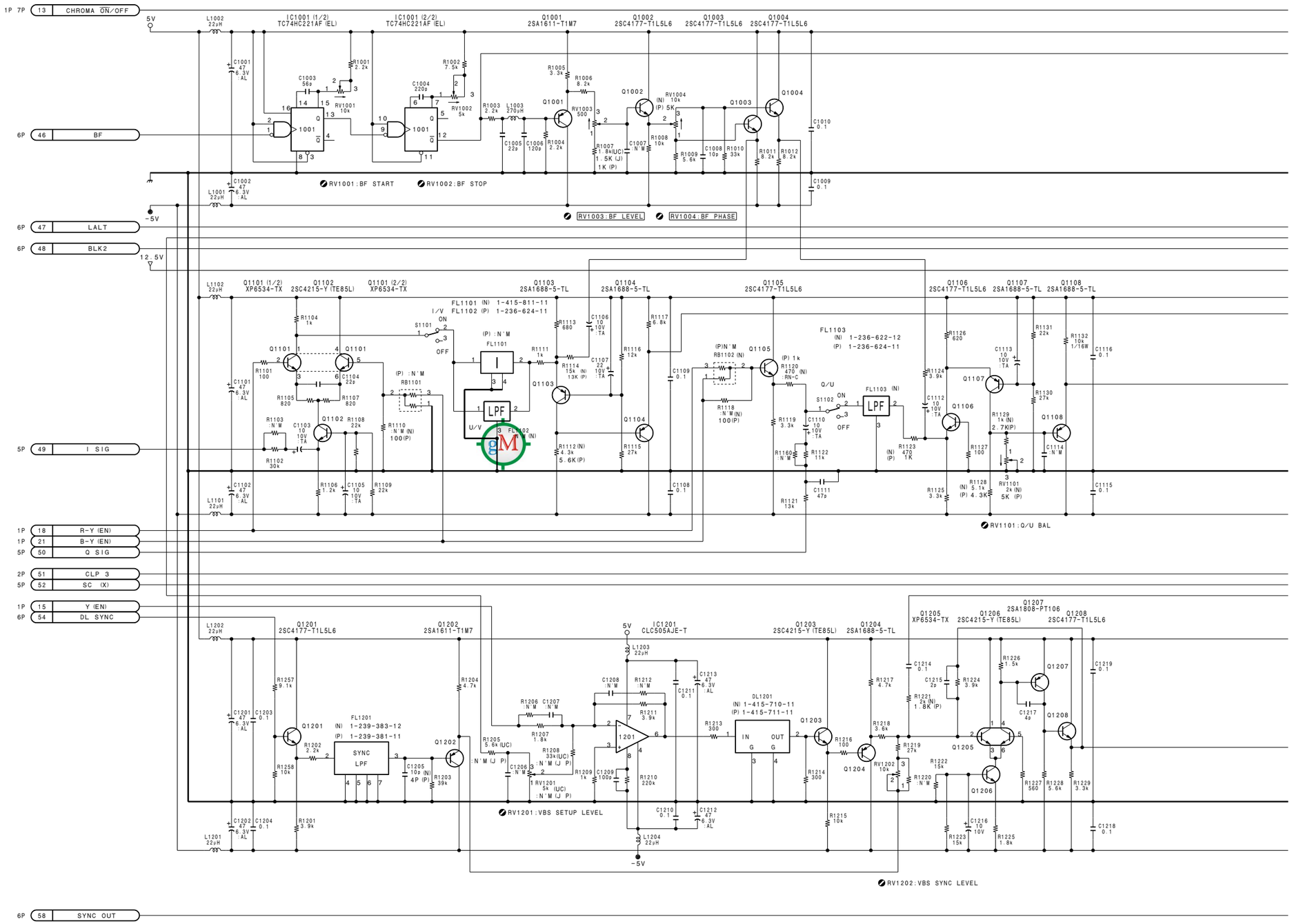

VA-175A/175B/175P (4/7)

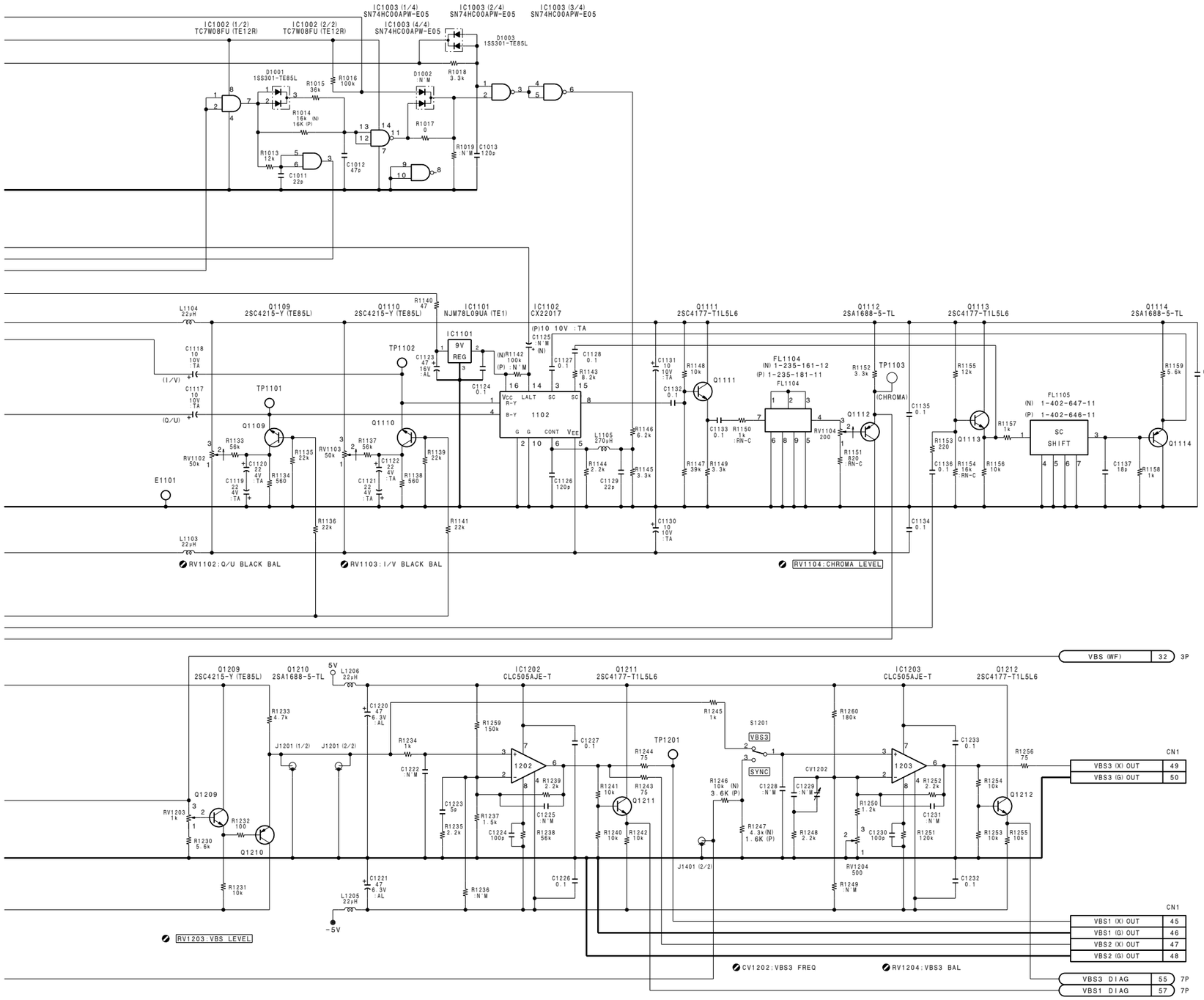

VA-175A/175B/175P (4/7)

BOARD NO. 1-661-625-12

B-¥CCU550-VA175UC/M-12

VA-175A/175B/175P (5/7)

CCU-550 (UC) : S/N 10101 and Higher
CCU-550 (J) : S/N 30101 and Higher
CCU-550P (CE) : S/N 40101 and Higher

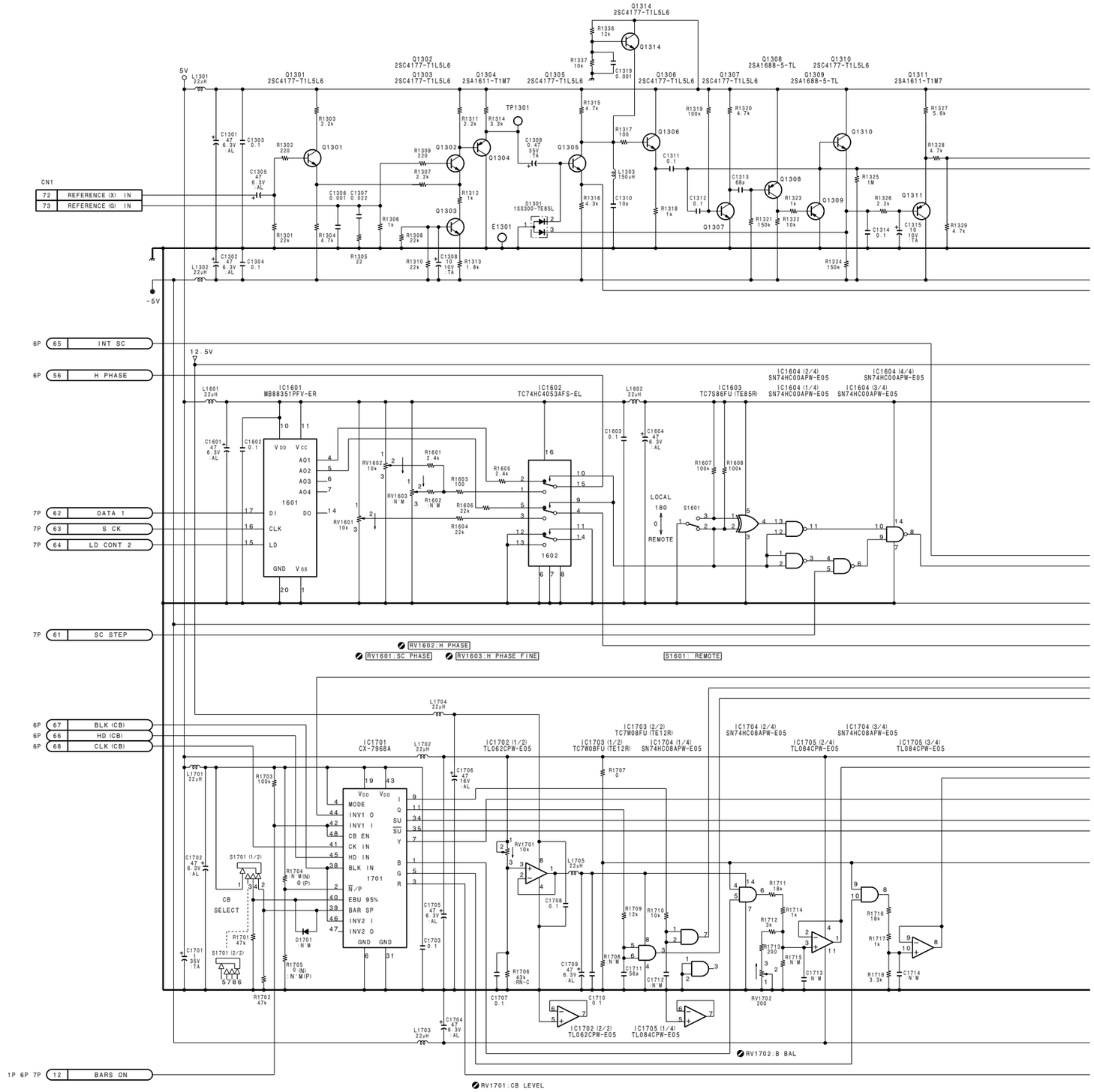

VA-175A/175B/175P (5/7)

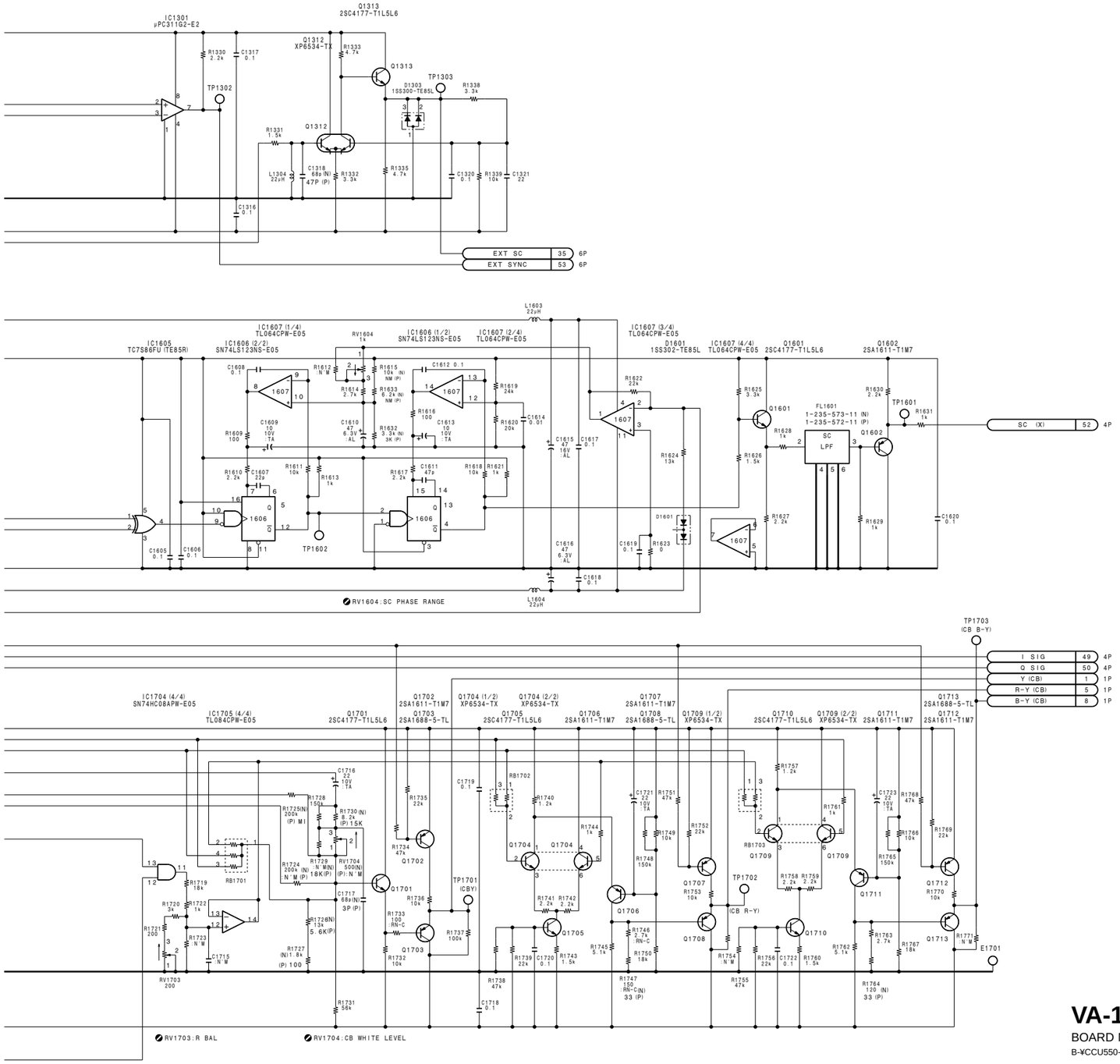

VA-175A/175B/175P (5/7)

BOARD NO. 1-661-625-12

B-¥CCU550-VA175UC/M-12

VA-175A/175B/175P (6/7)

CCU-550 (UC) : S/N 10101 and Higher
CCU-550 (J) : S/N 30101 and Higher
CCU-550P (CE) : S/N 40101 and Higher

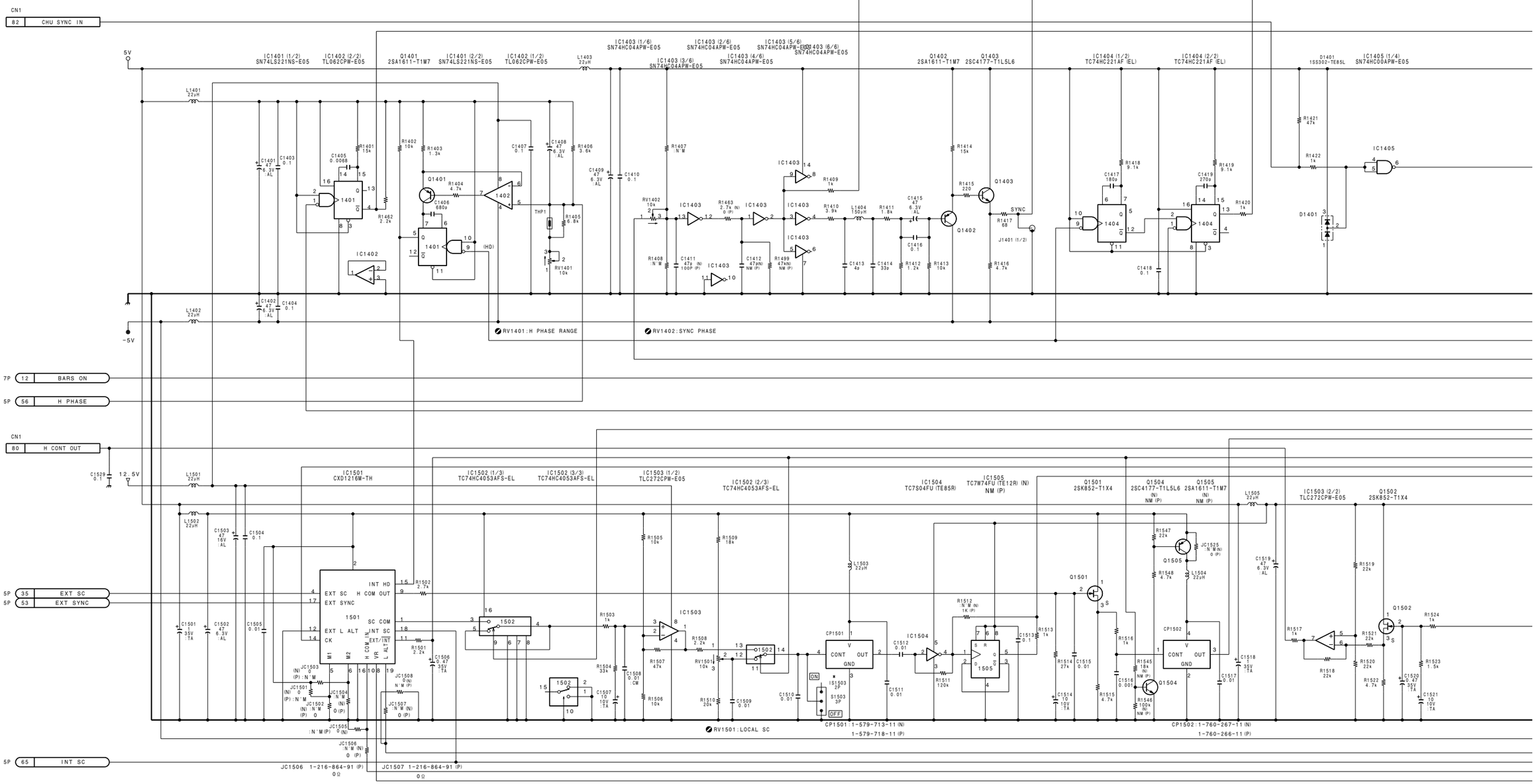

http://getMANUAL.com

VA-175A/175B/175P (6/7)

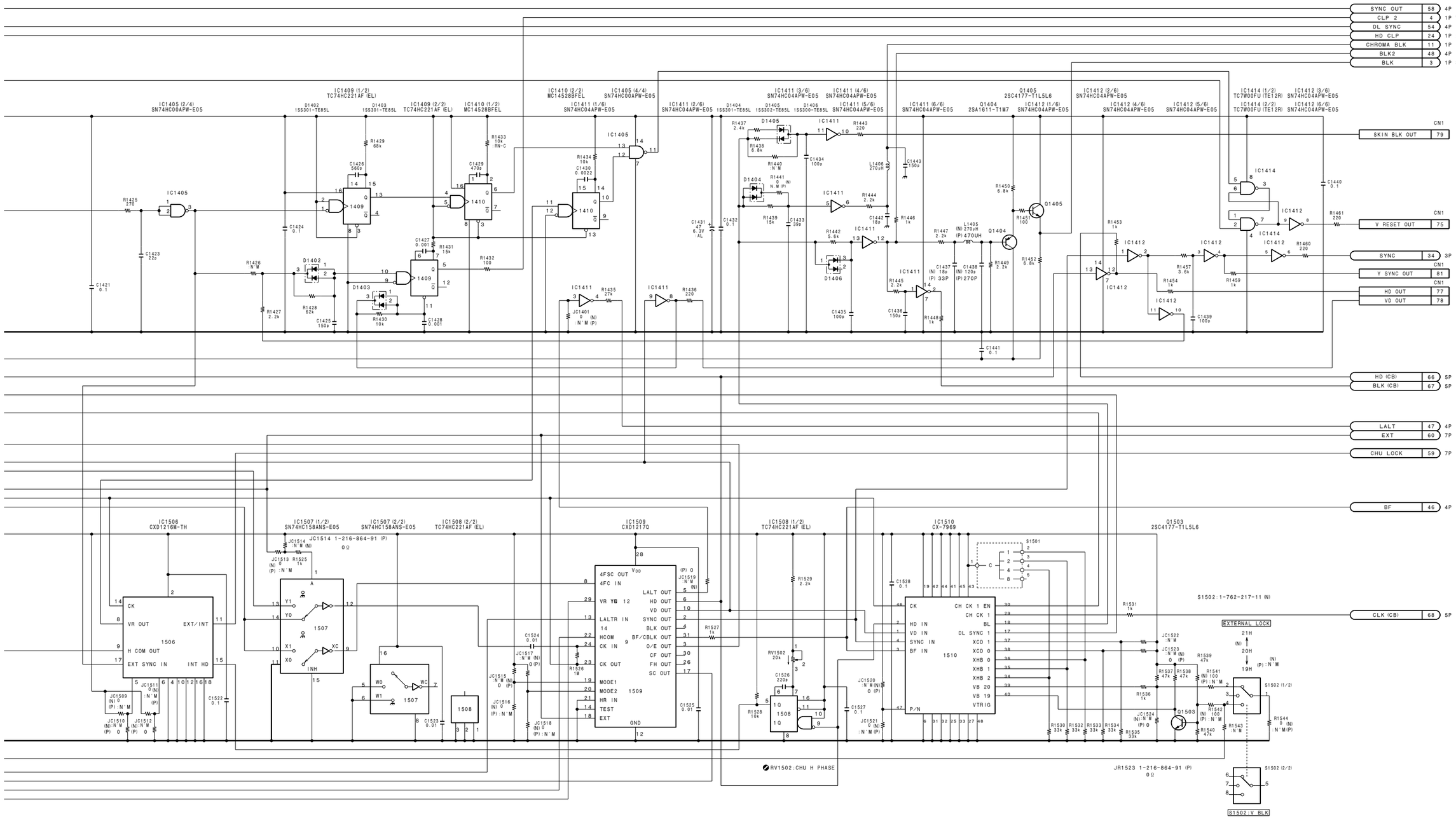

VA-175A/175B/175P (6/7)

BOARD NO. 1-661-625-12

B-¥CCU550-VA175UC/M-12

VA-175A/175B/175P (7/7)

CCU-550 (UC) : S/N 10101 and Higher
CCU-550 (J) : S/N 30101 and Higher
CCU-550P (CE) : S/N 40101 and Higher

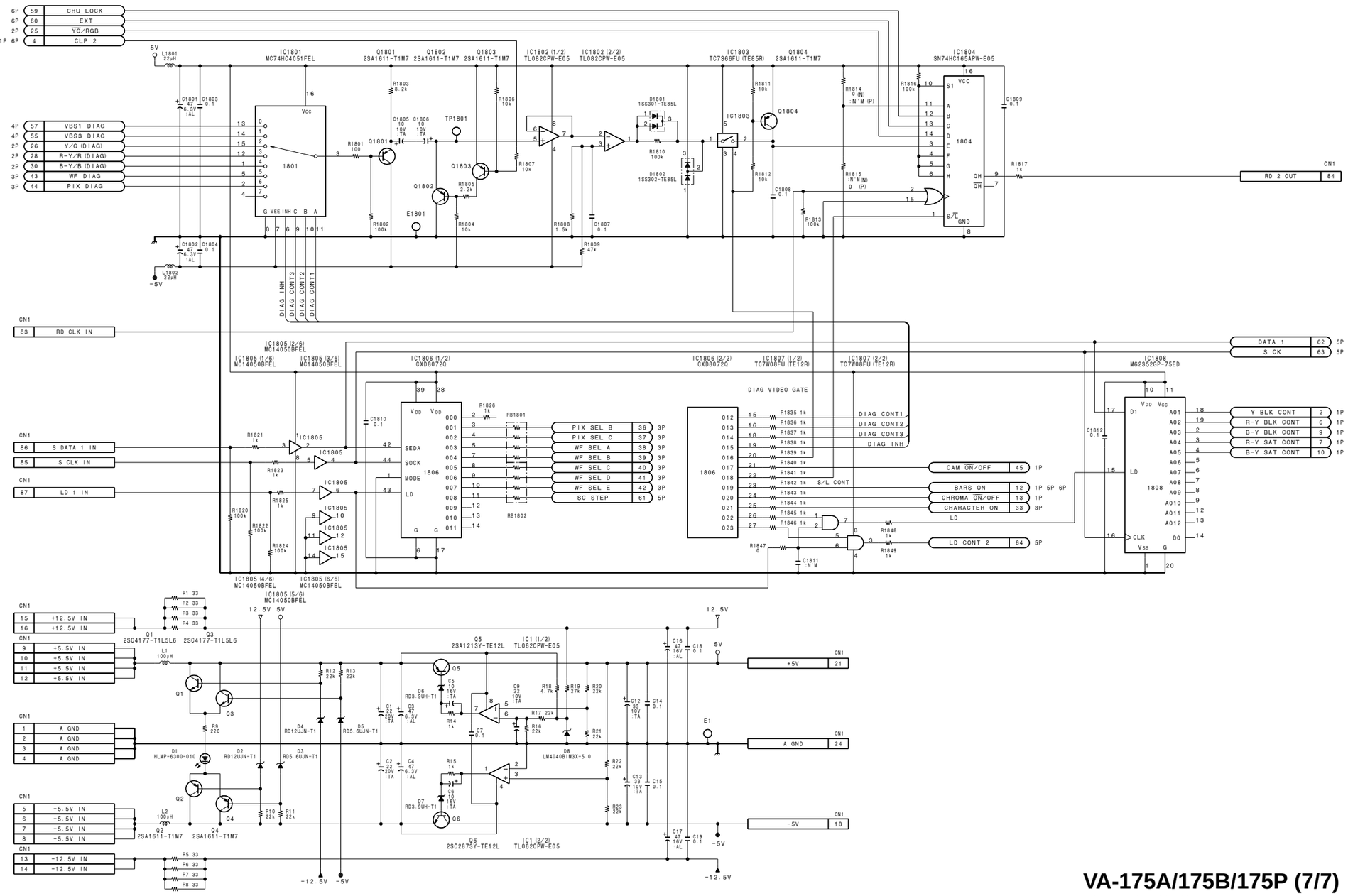

VA-175A/175B/175P (7/7)

BOARD NO. 1-661-625-12

B-¥CCU550-VA175UC/M-12

CCU-550 (UC) : S/N 10001 through 10100
CCU-550 (J) : S/N 30001 through 30100
CCU-550P (CE) : S/N 40001 through 40100

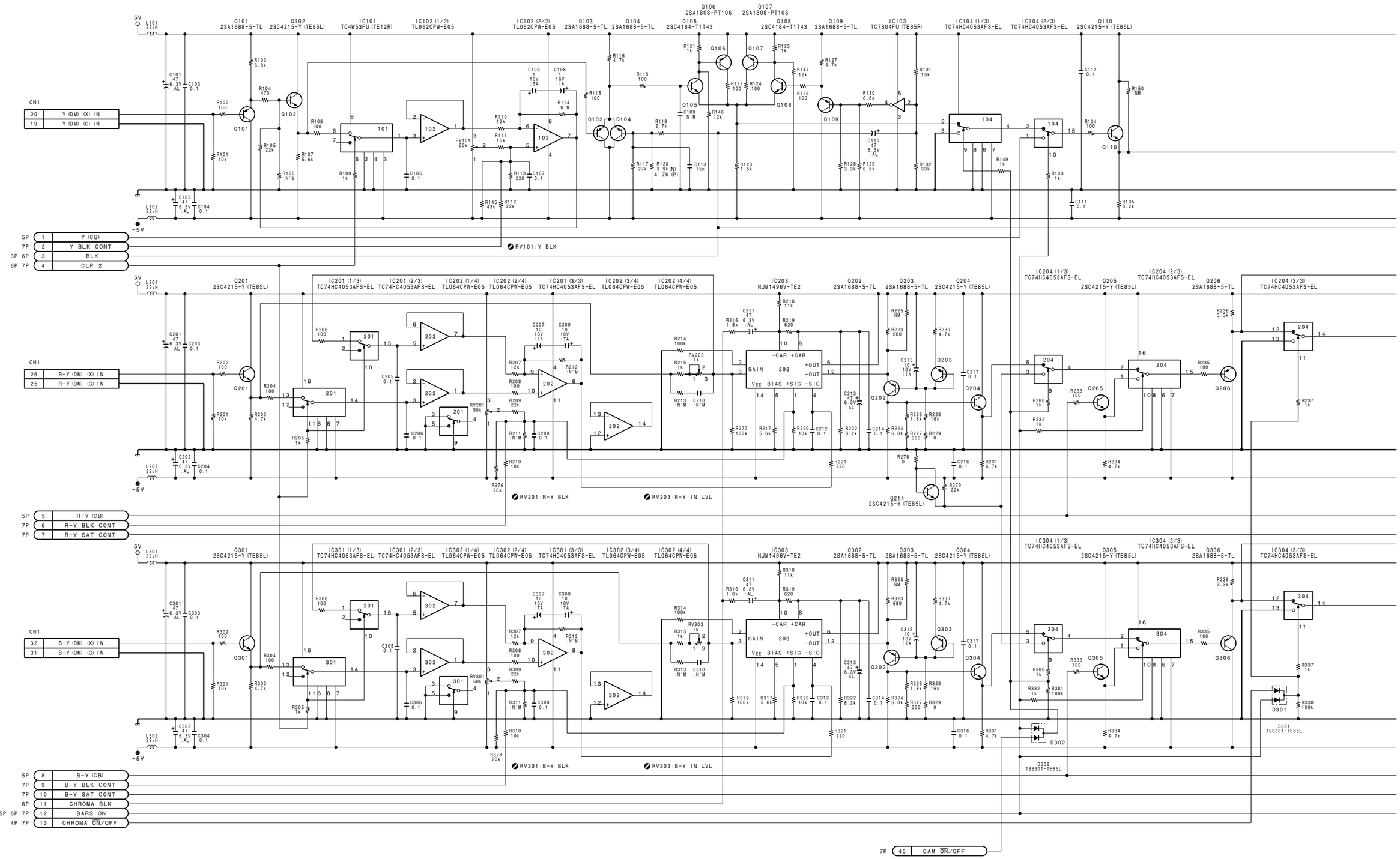

VA-175A/175B/175P (1/7)

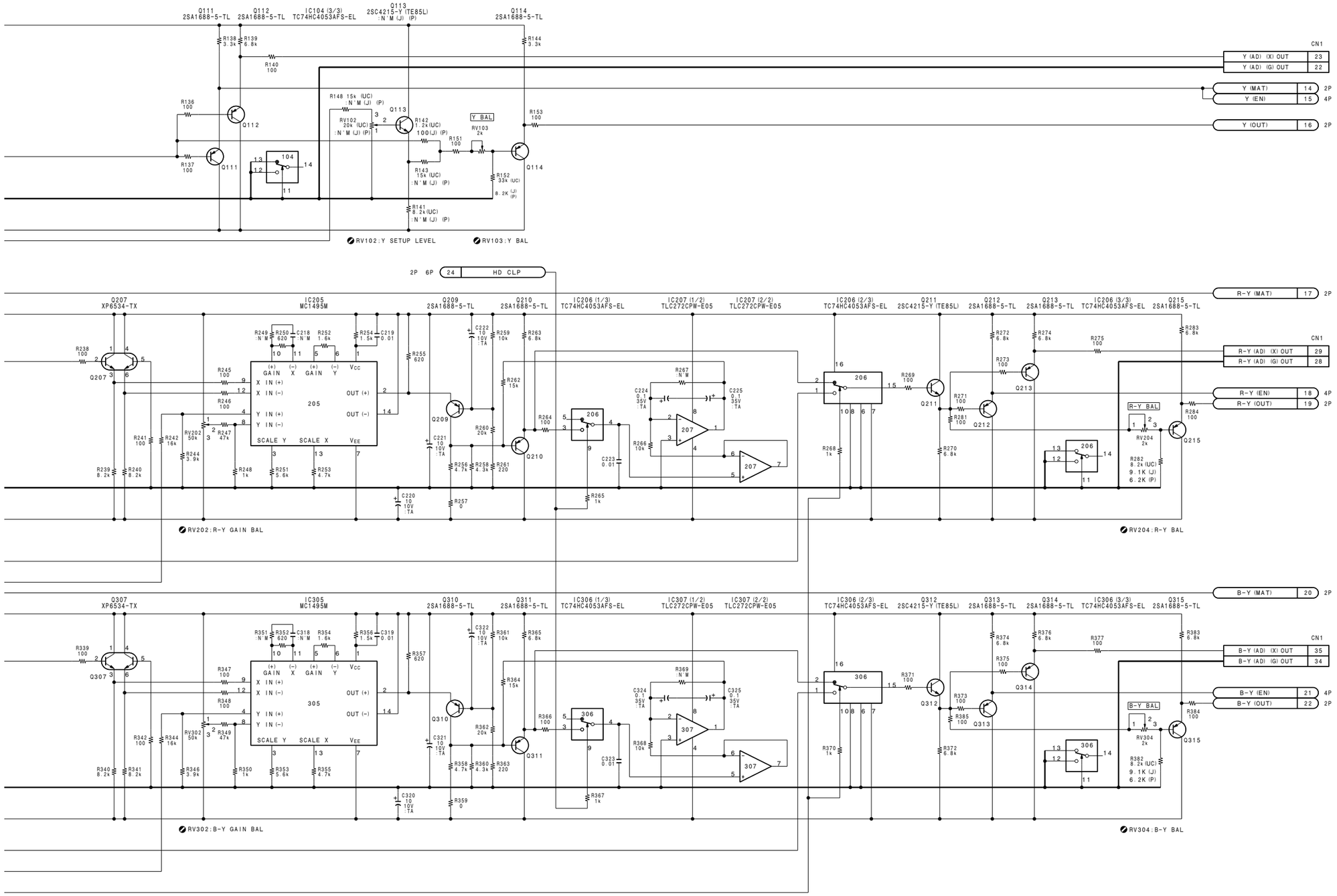

VA-175A/175B/175P (1/7)

BOARD NO. 1-661-625-11

B-¥CCU550-VA175UC/M-11

CCU-550 (UC) : S/N 10001 through 10100
CCU-550 (J) : S/N 30001 through 30100
CCU-550P (CE) : S/N 40001 through 40100

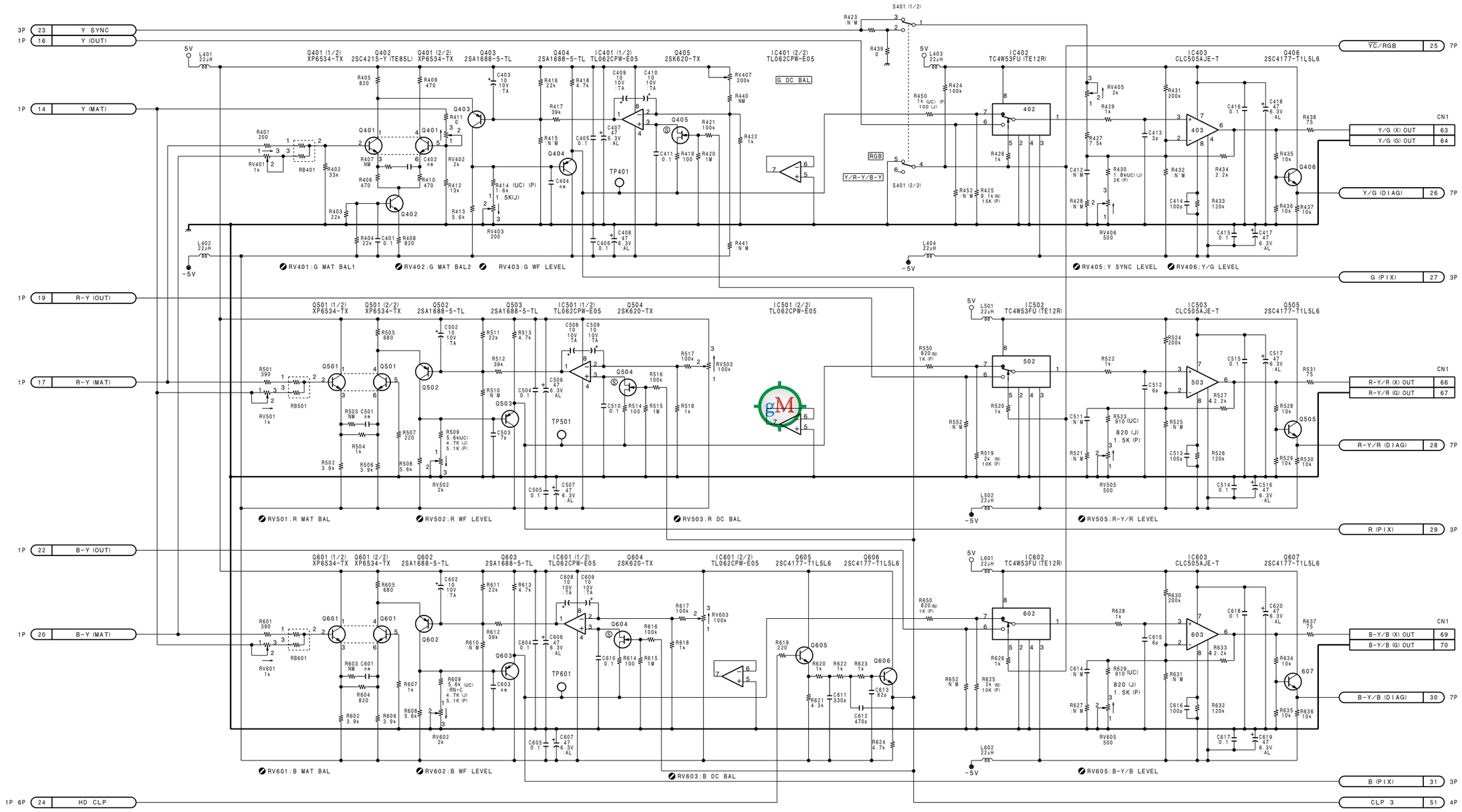

VA-175A/175B/175P (2/7)

BOARD NO. 1-661-625-11

B-¥CCU550-VA175UC/M-11

VA-175A/175B/175P (3/7)

CCU-550 (UC) : S/N 10001 through 10100
CCU-550 (J) : S/N 30001 through 30100
CCU-550P (CE) : S/N 40001 through 40100

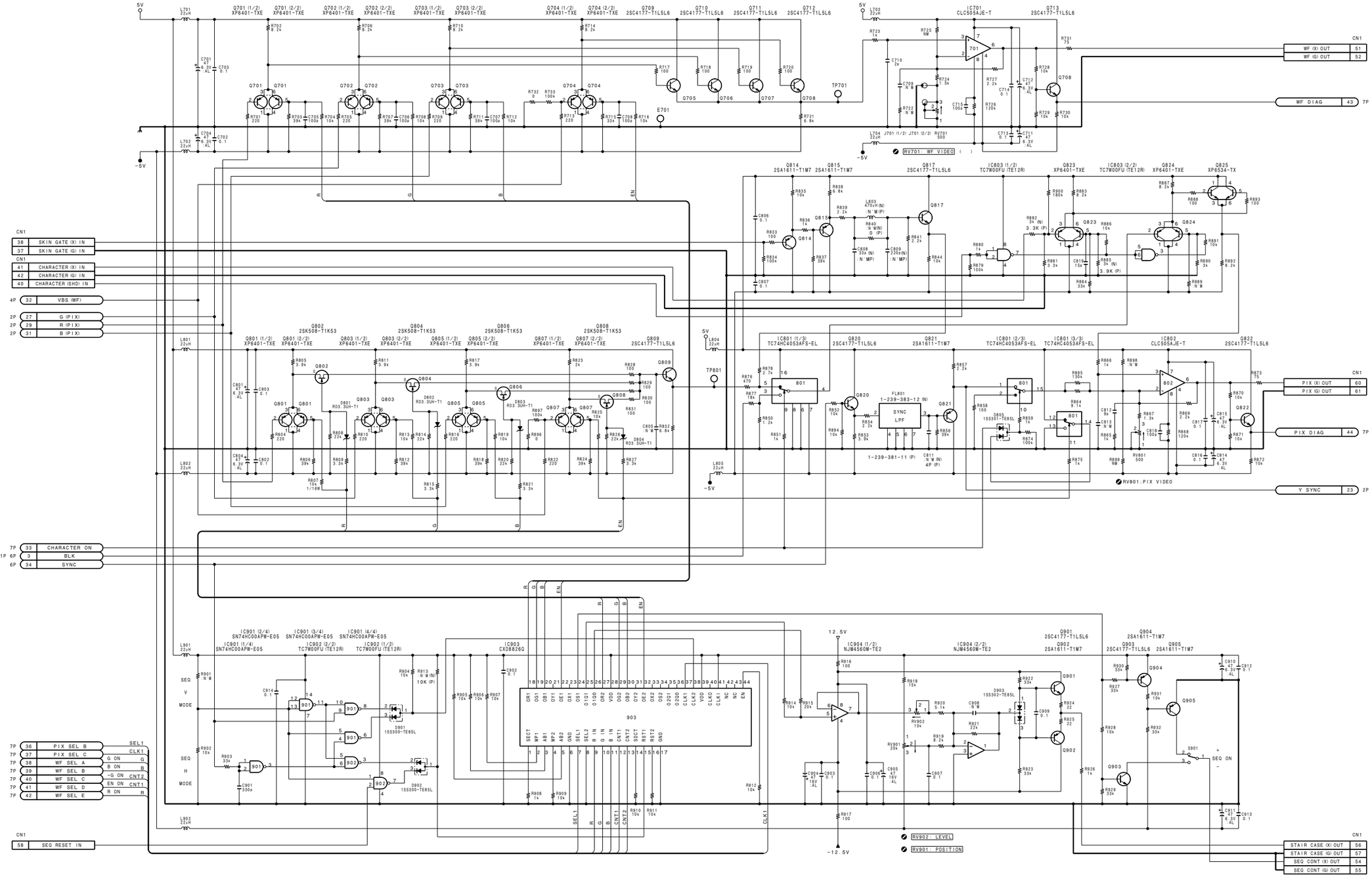

VA-175A/175B/175P (3/7)

BOARD NO. 1-661-625-11

B-¥CCU550-VA175UC/M-11

VA-175A/175B/175P (4/7)

CCU-550 (UC) : S/N 10001 through 10100
CCU-550 (J) : S/N 30001 through 30100
CCU-550P (CE) : S/N 40001 through 40100

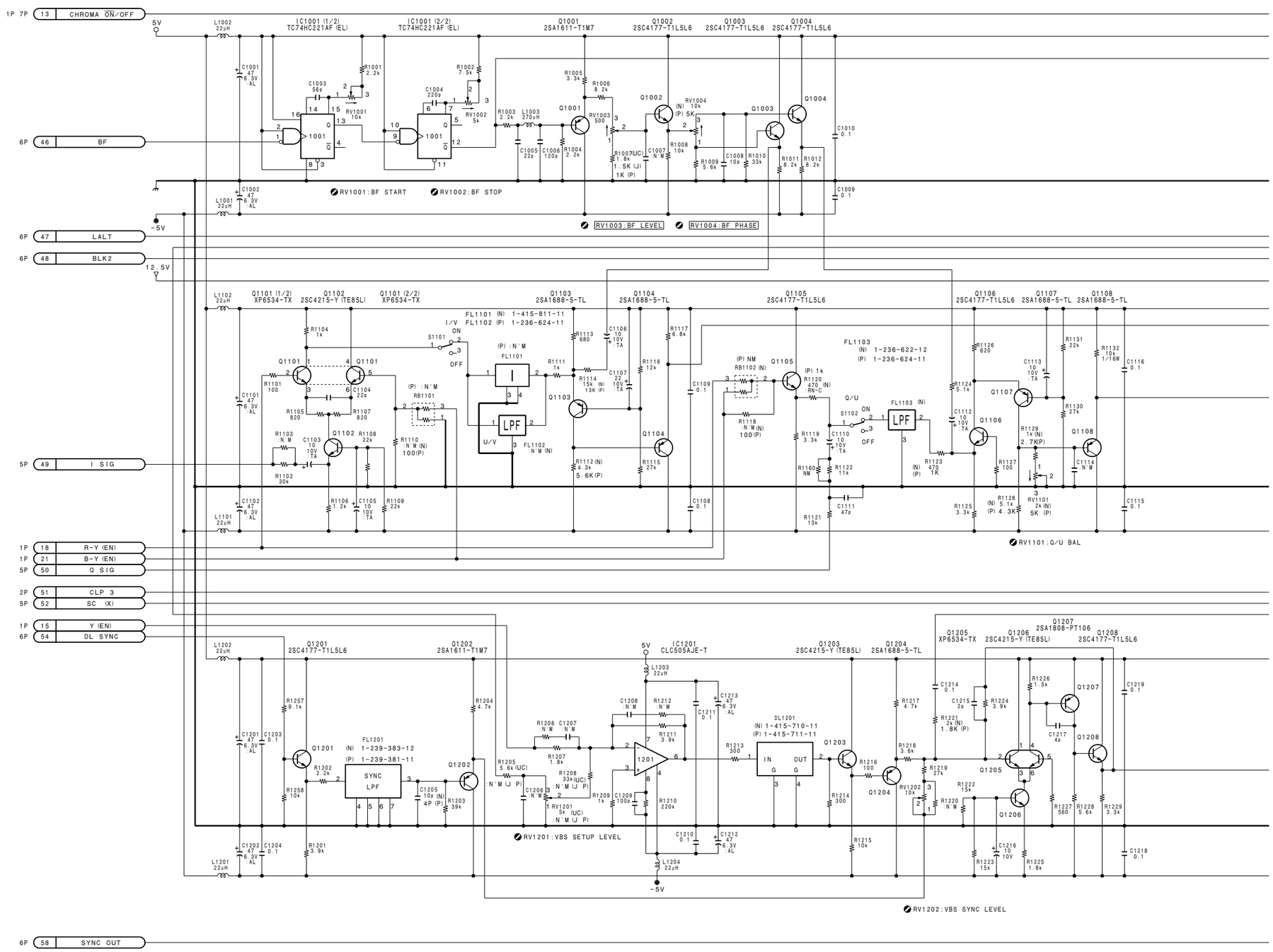

VA-175A/175B/175P (4/7)

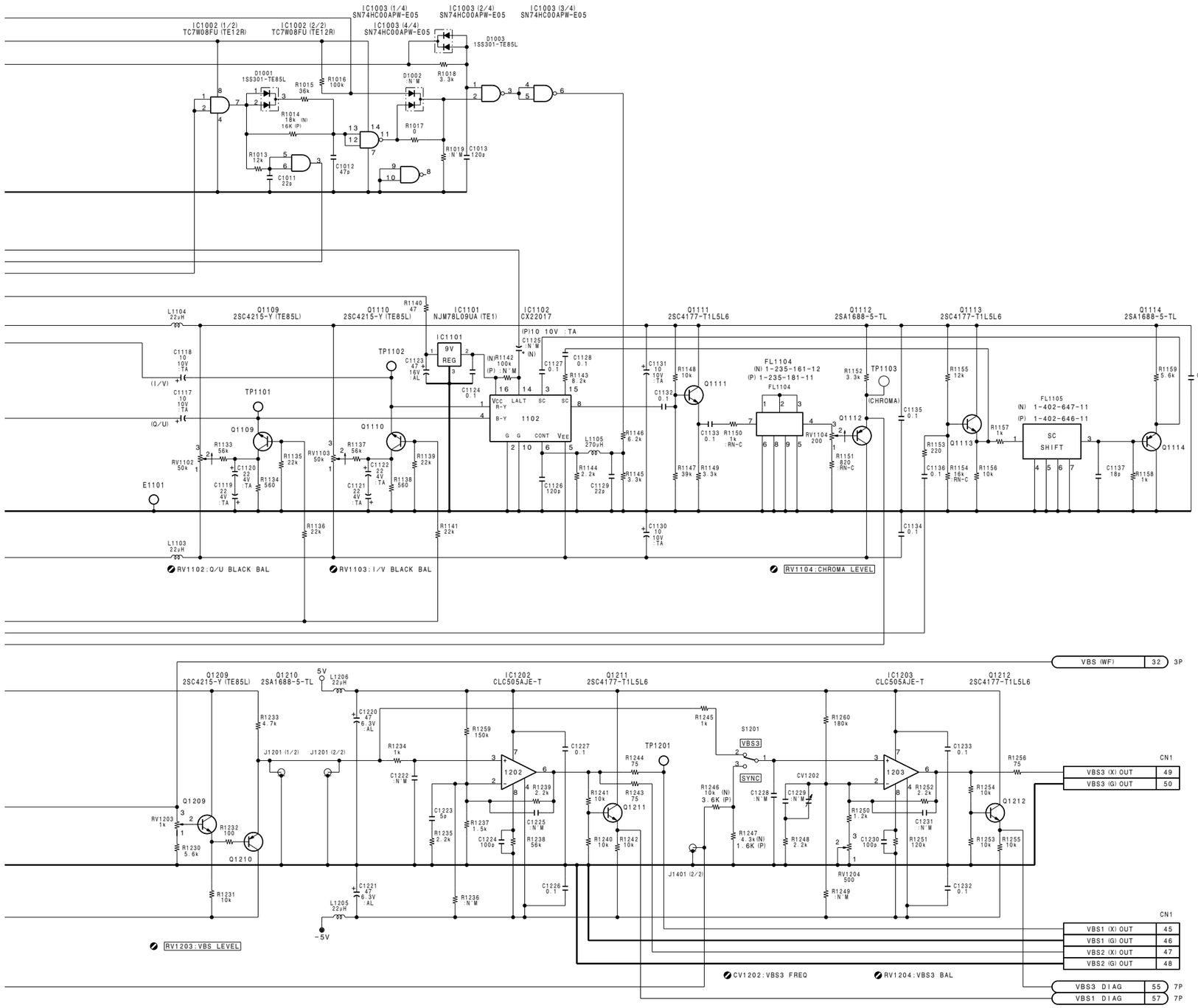

VA-175A/175B/175P (4/7)

BOARD NO. 1-661-625-11

B-¥CCU550-VA175UC/M-11

VA-175A/175B/175P (5/7)

CCU-550 (UC) : S/N 10001 through 10100
CCU-550 (J) : S/N 30001 through 30100
CCU-550P (CE) : S/N 40001 through 40100

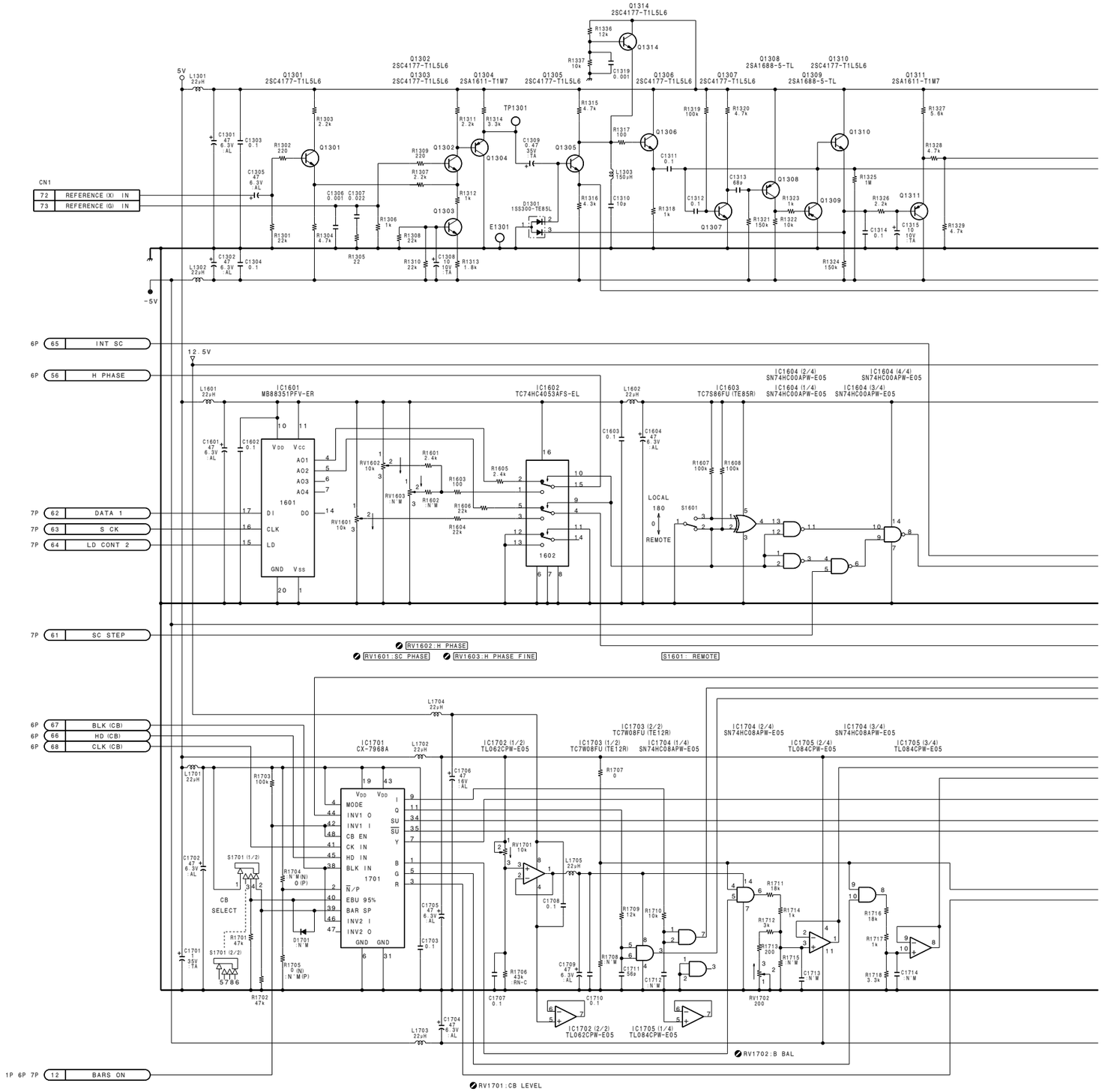

http://getMANUAL.com

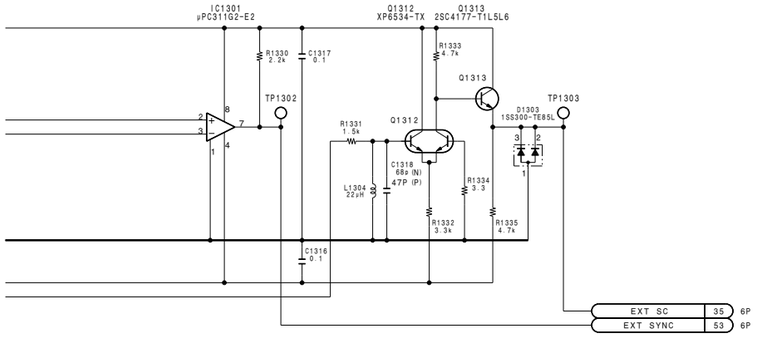

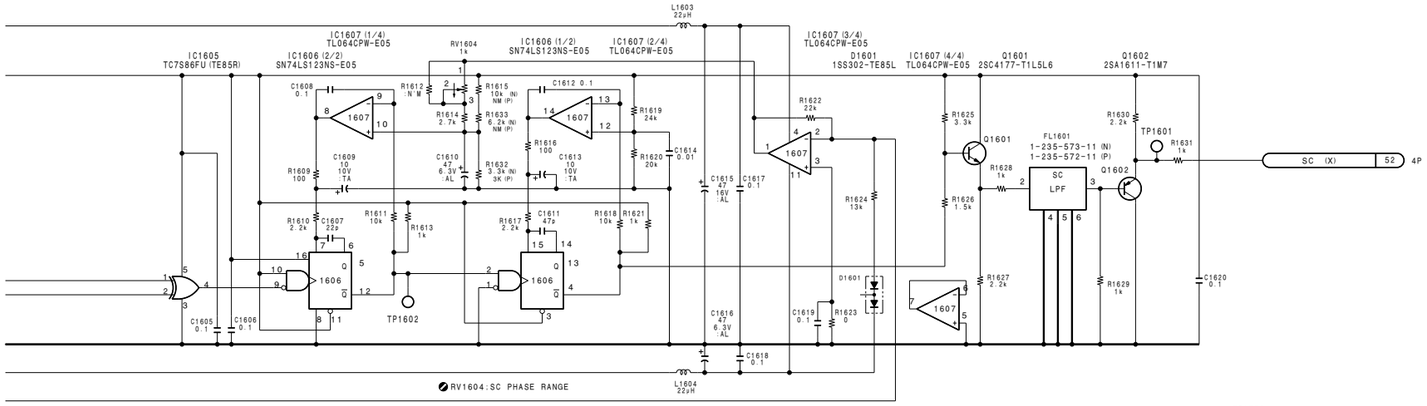

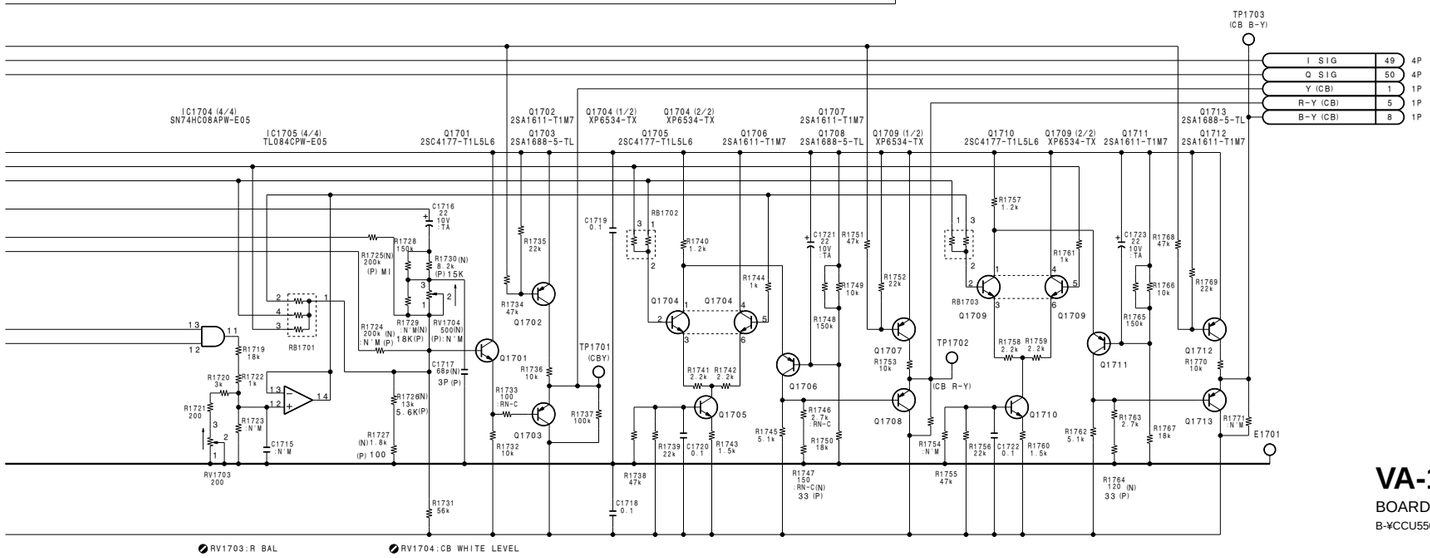

VA-175A/175B/175P (5/7)

BOARD NO. 1-661-625-11

B-¥CCU550-VA175UC/M-11

VA-175A/175B/175P (6/7)

CCU-550 (UC) : S/N 10001 through 10100
CCU-550 (J) : S/N 30001 through 30100
CCU-550P (CE) : S/N 40001 through 40100

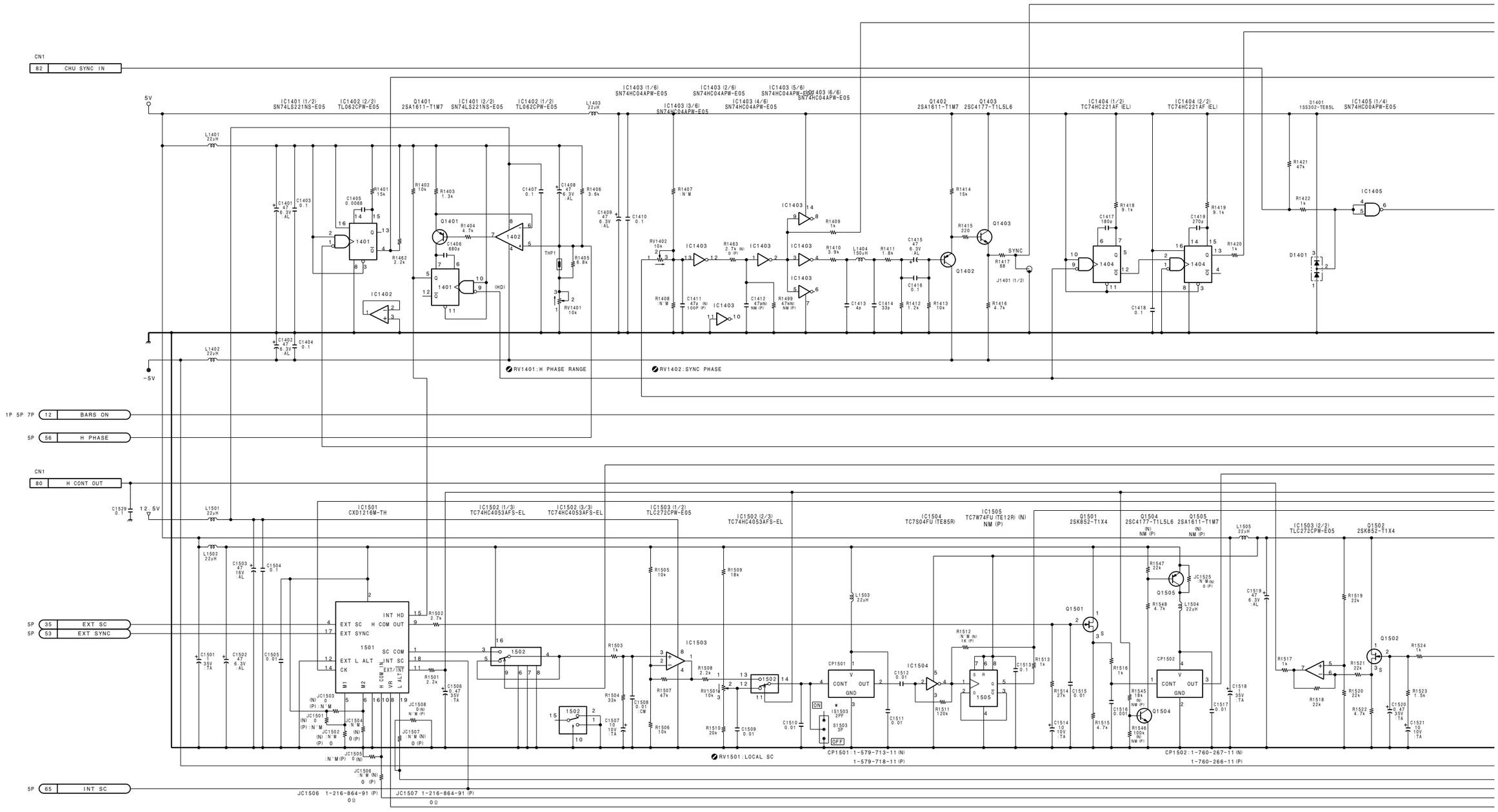

VA-175A/175B/175P (6/7)

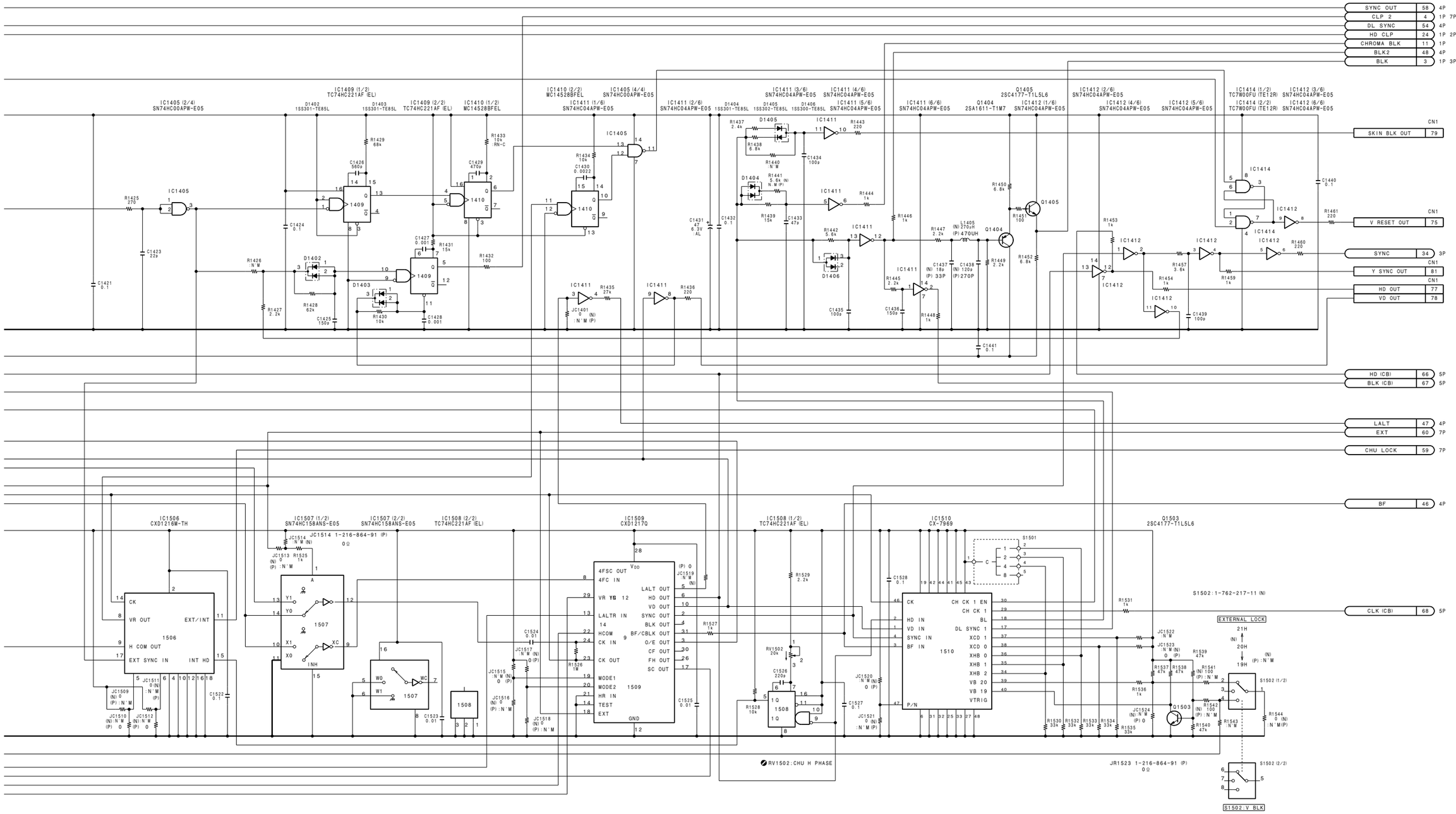

VA-175A/175B/175P (6/7)

BOARD NO. 1-661-625-11

B-¥CCU550-VA175UC/M-11

VA-175A/175B/175P (7/7)

CCU-550 (UC) : S/N 10001 through 10100
CCU-550 (J) : S/N 30001 through 30100
CCU-550P (CE) : S/N 40001 through 40100

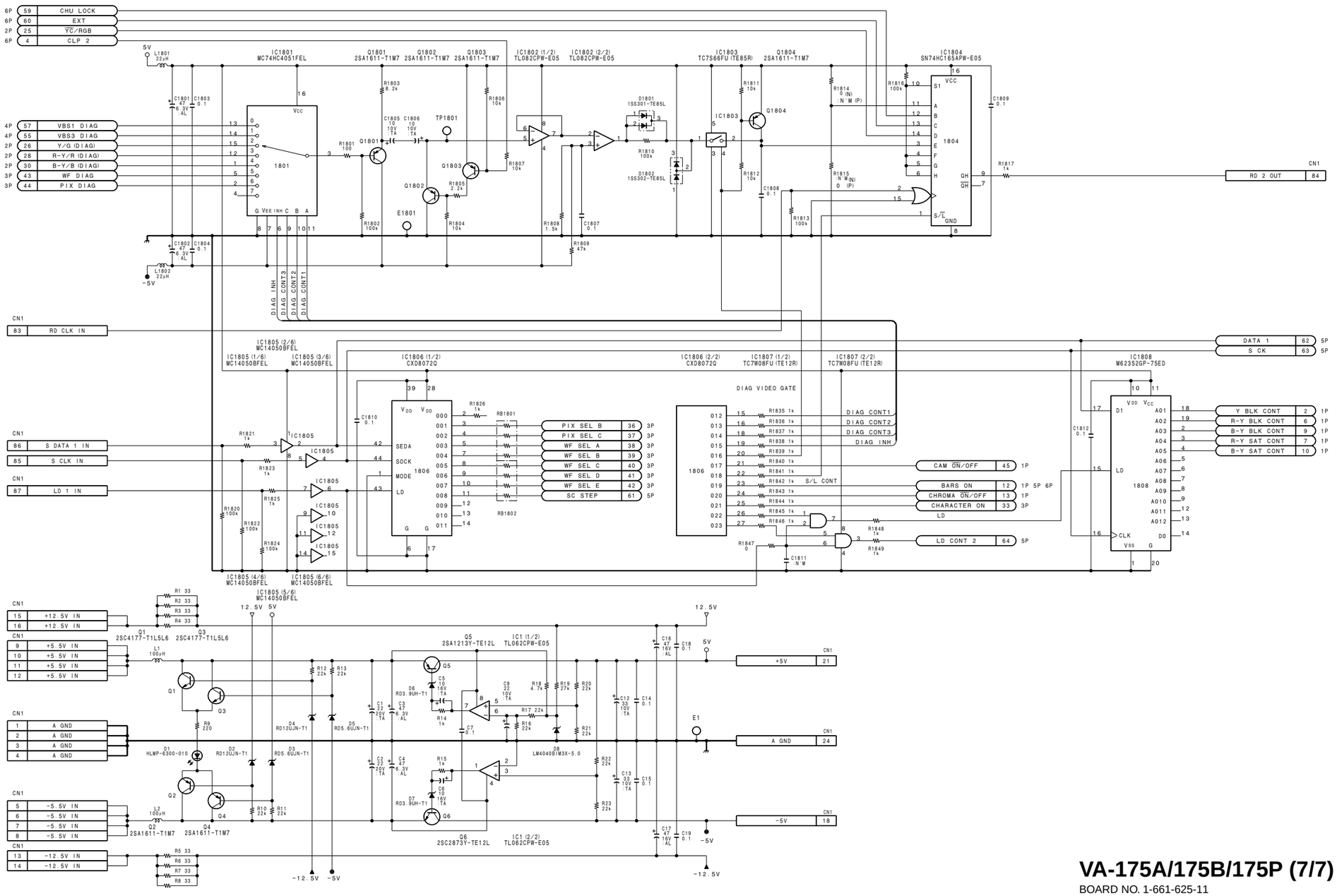

VA-175A/175B/175P (7/7)

BOARD NO. 1-661-625-11

B-¥CCU550-VA175UC/M-11

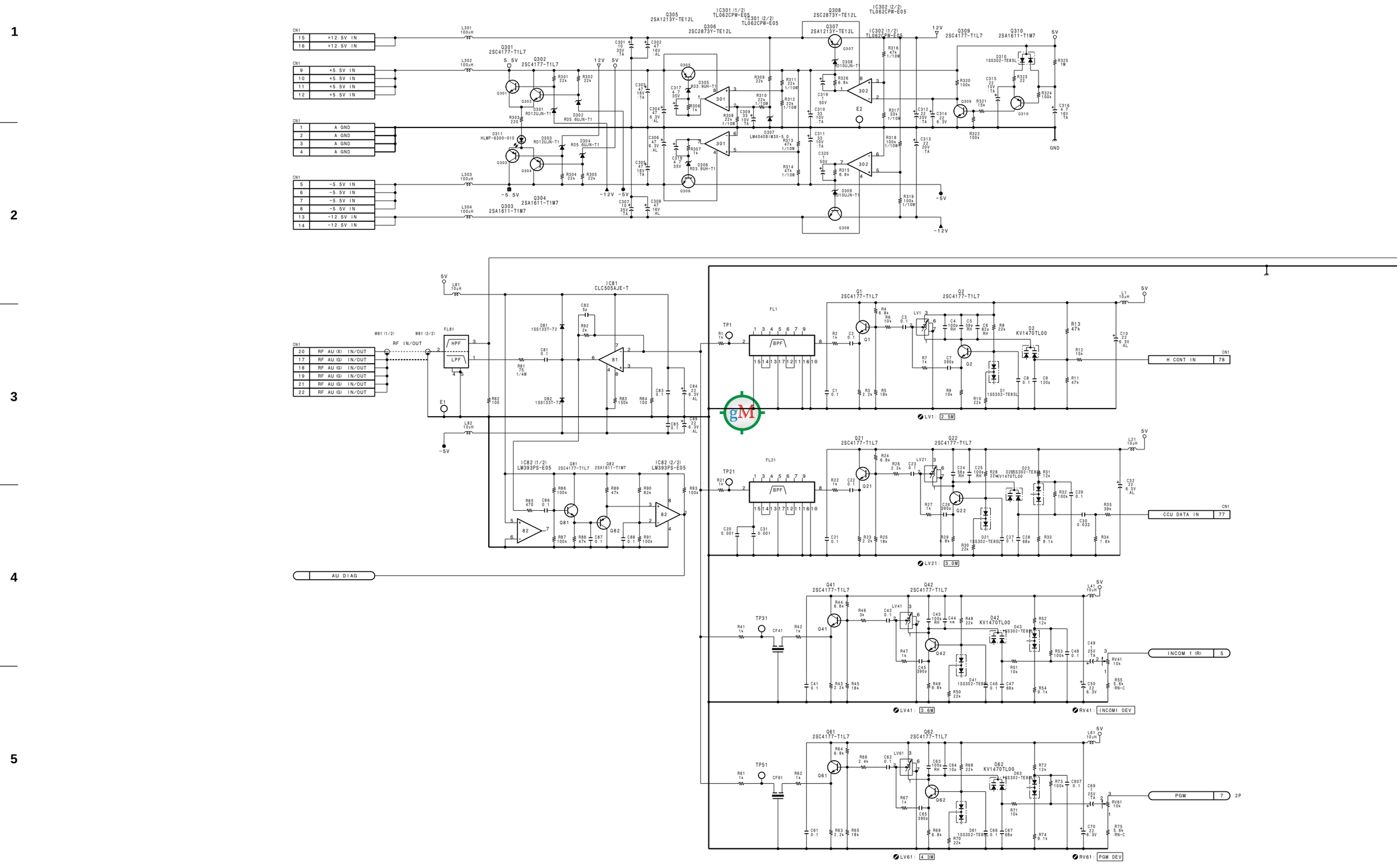

CN1
+12.5V IN
+5.5V IN
A GND
-5.5V IN
-12.5V IN
RF AU (X) IN/OUT
RF AU (G) IN/OUT
RF IN/OUT
AU DIAG
H CONT IN
CCU DATA IN
INCOM 1 (R)
PGM
INCOM1 DEV
PGM DEV

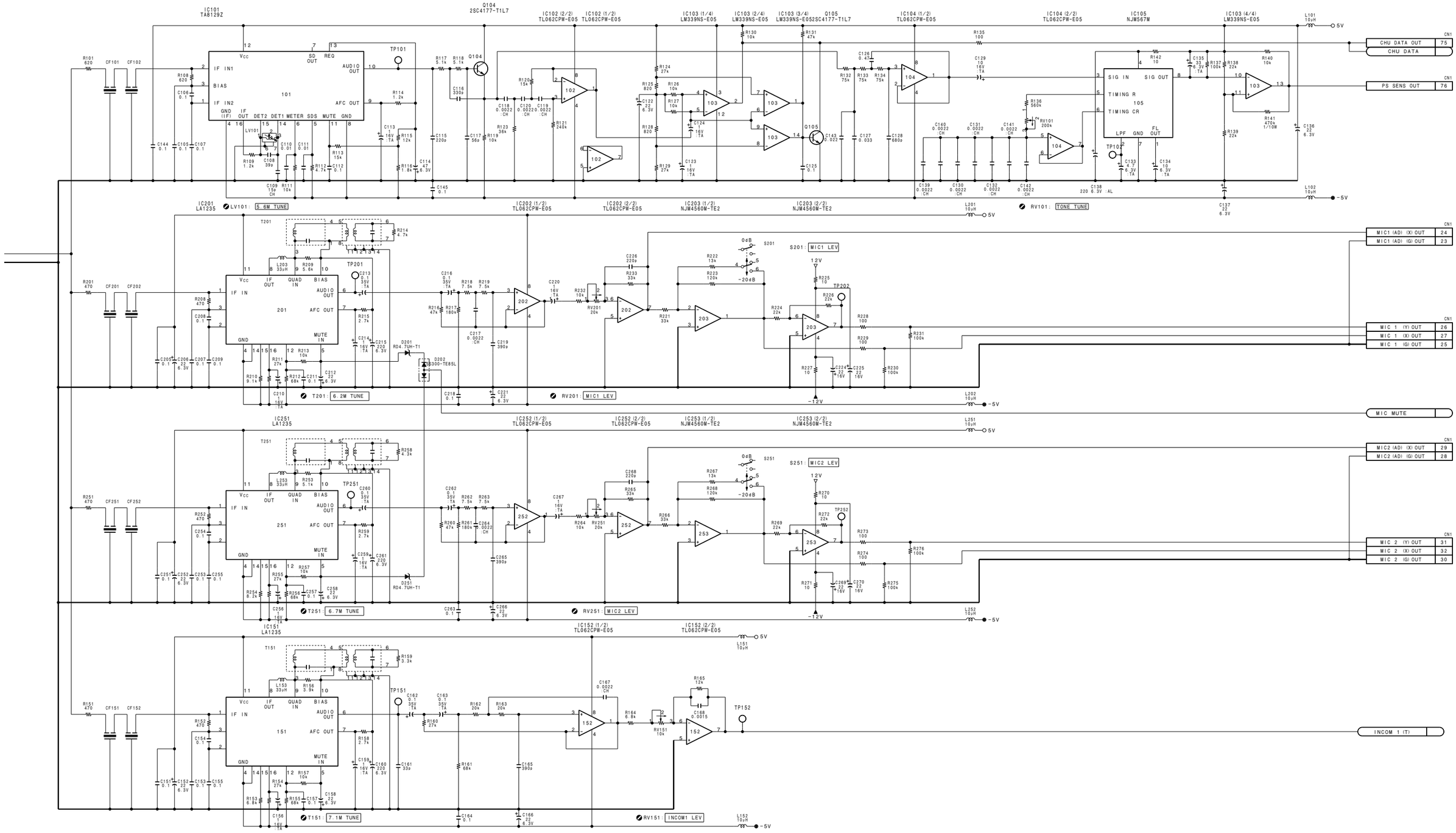

AU-231 (1/2)

BOARD NO. 1-661-624-11

B-¥CCU550-AU231/M-11

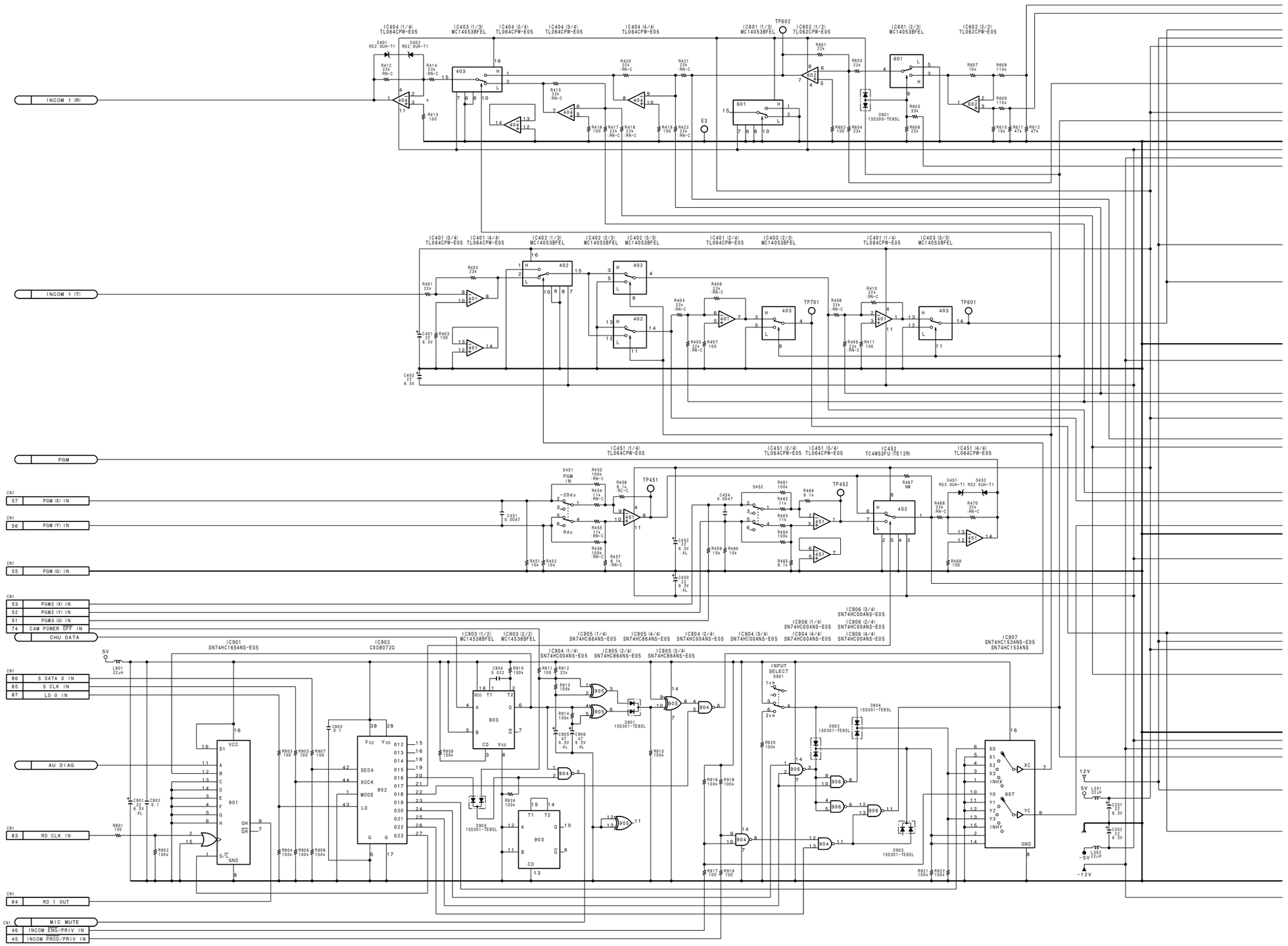
INCOM 1 (R)
INCOM 1 (T)
PGM
PGM (X) IN
PGM (Y) IN
PGM (G) IN
PGM2 (X) IN
PGM2 (Y) IN
PGM3 (G) IN
CAM POWER OFF IN
CHU DATA
S DATA O IN
S CLK IN
LD O IN
AU DIAG
RD CLK IN
RD 1 OUT
MIC MUTE
INCOM ENG/PRIV IN
INCOM PROD/PRIV IN
IC404 (1/4) TL064CPW-E05
IC403 (1/3) MC14053BFEL
IC404 (2/4) TL064CPW-E05
IC404 (3/4) TL064CPW-E05
IC404 (4/4) TL064CPW-E05
IC601 (1/3) MC14053BFEL
IC602 (1/2) TL062CPW-E05
IC601 (2/3) MC14053BFEL
IC602 (2/2) TL062CPW-E05
IC401 (3/4) TL064CPW-E05
IC401 (4/4) TL064CPW-E05
IC402 (1/3) MC14053BFEL
IC402 (2/3) MC14053BFEL
IC402 (3/3) MC14053BFEL
IC401 (2/4) TL064CPW-E05
IC403 (2/3) MC14053BFEL
IC401 (1/4) TL064CPW-E05
IC403 (3/3) MC14053BFEL
IC451 (1/4) TL064CPW-E05
IC451 (2/4) TL064CPW-E05
IC451 (3/4) TL064CPW-E05
IC452 TC4W53FU (TE12R)
IC451 (4/4) TL064CPW-E05
IC901 SN74HC165ANS-E05
IC902 CXD8072Q
IC903 (1/2) MC14538BFEL
IC903 (2/2) MC14538BFEL
IC904 (1/4) SN74HC00ANS-E05
IC905 (1/4) SN74HC86ANS-E05
IC905 (4/4) SN74HC86ANS-E05
IC904 (2/4) SN74HC00ANS-E05
IC904 (3/4) SN74HC00ANS-E05
IC906 (1/4) SN74HC00ANS-E05
IC906 (3/4) SN74HC00ANS-E05
IC905 (2/4) SN74HC86ANS-E05
IC905 (3/4) SN74HC86ANS-E05
IC906 (2/4) SN74HC00ANS-E05
IC906 (4/4) SN74HC00ANS-E05
IC907 SN74HC153ANS-E05 SN74HC153ANS
TP602
TP701
TP601
TP451
TP452
E3
INPUT SELECT S901
5V
12V
-5V
-12V

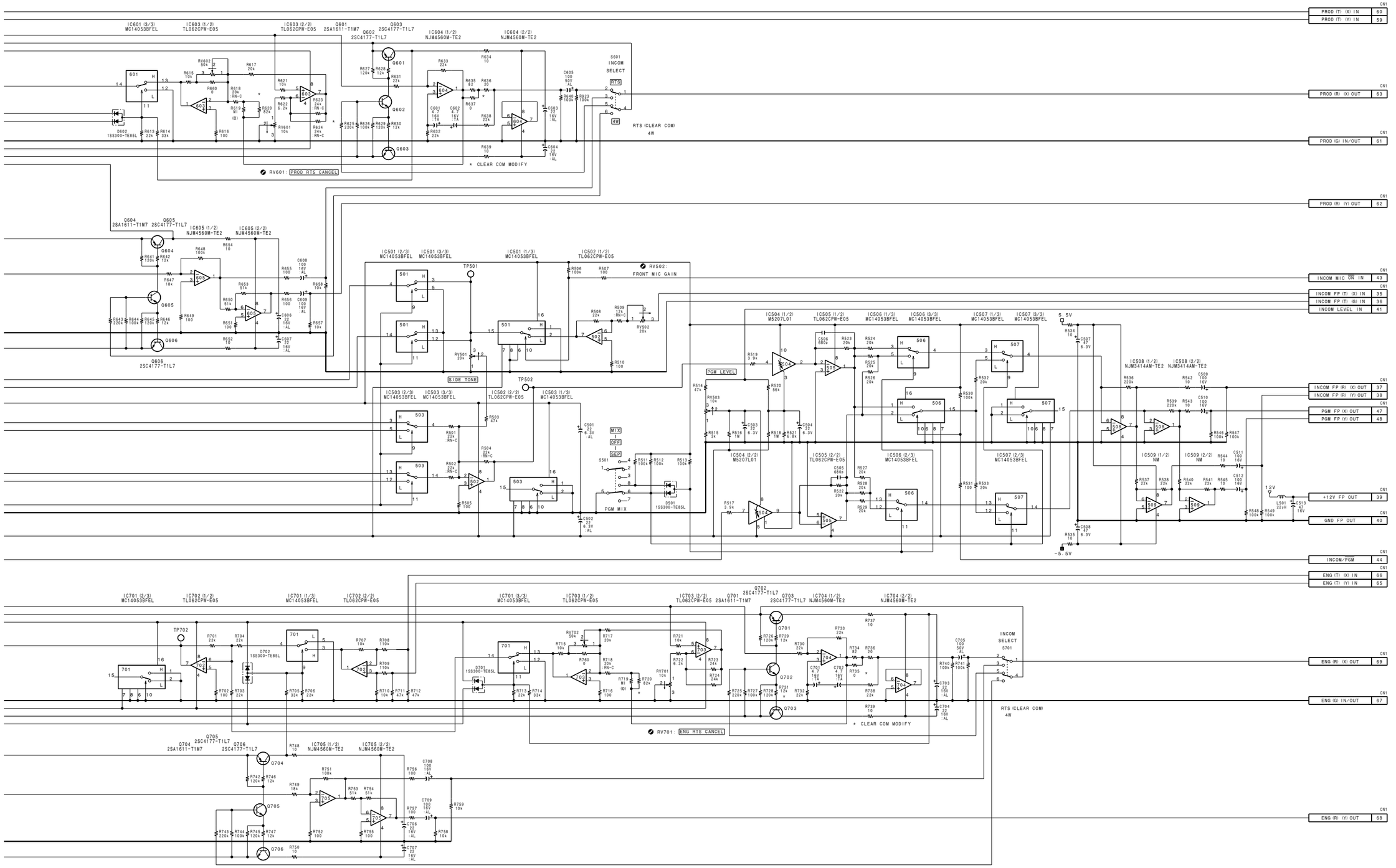

AU-231 (2/2)

BOARD NO. 1-661-624-11

B-¥CCU550-AU231/M-11

CCU-550 (UC) : S/N 10301 and Higher
CCU-550 (J) : S/N 30301 and Higher
CCU-550P (CE) : S/N 40401 and Higher

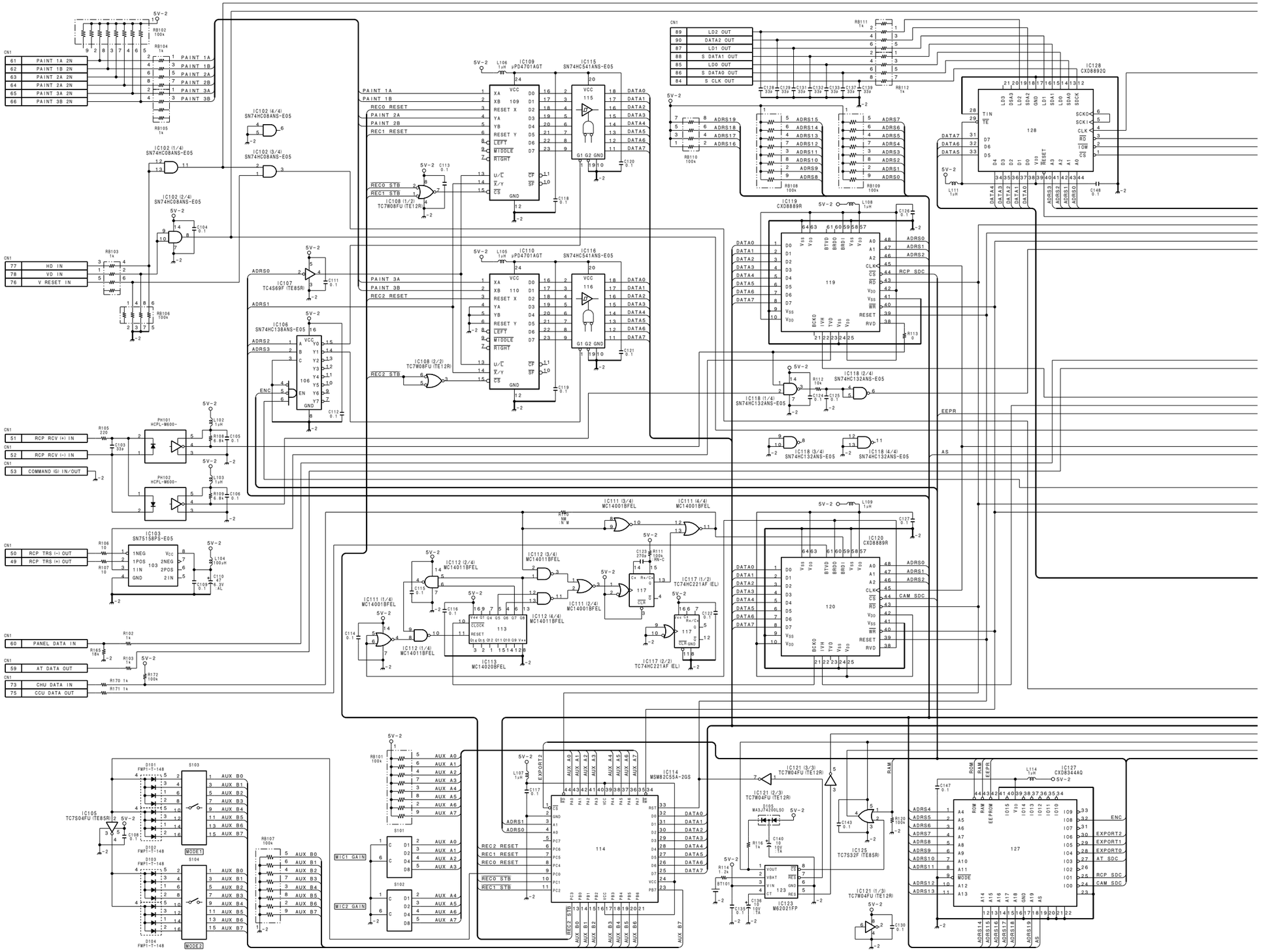

http://getMANUAL.com

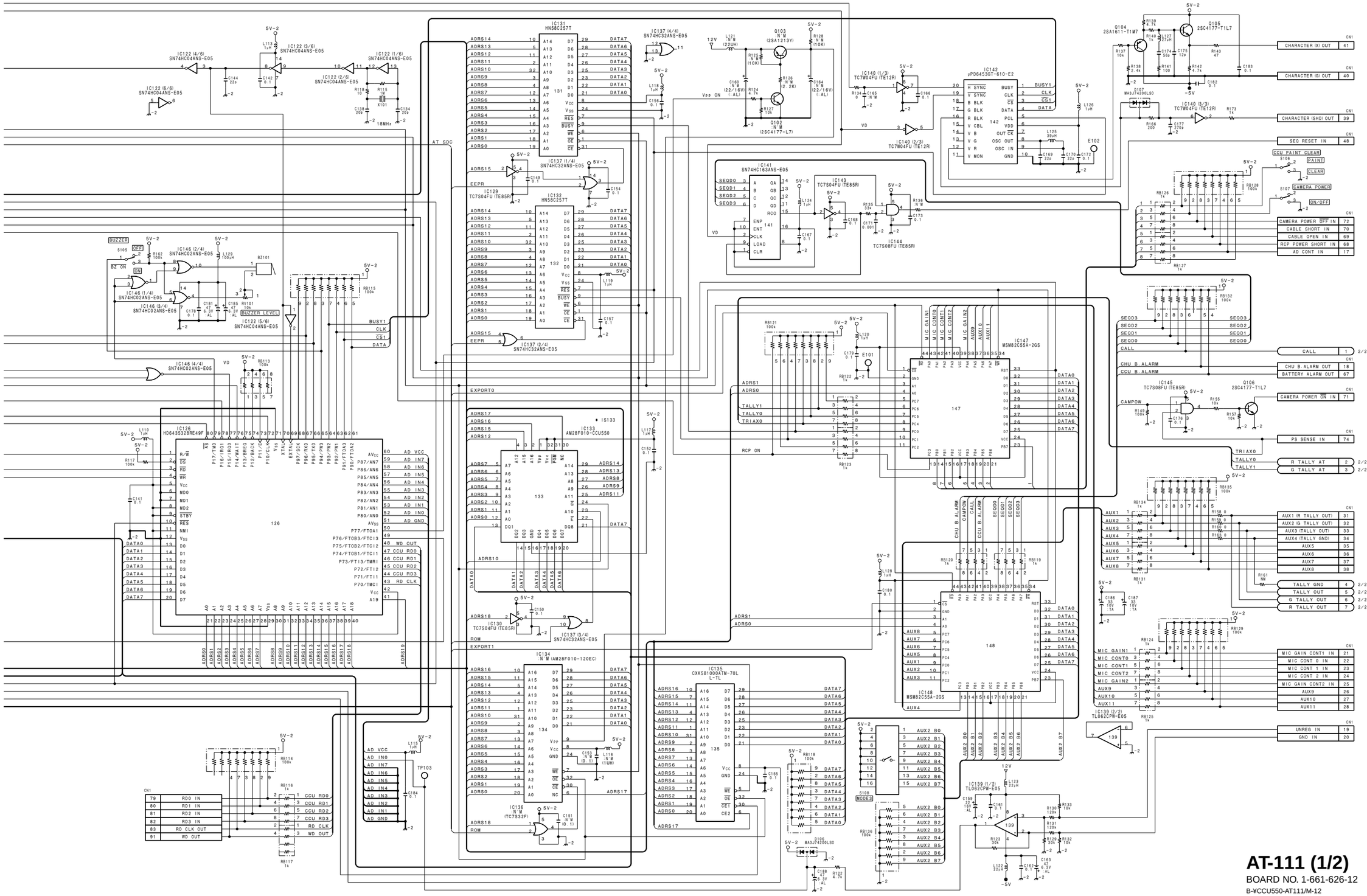

AT-111 (1/2)

BOARD NO. 1-661-626-12

B-¥CCU550-AT111/M-12

AT-111 (2/2)

CCU-550 (UC) : S/N 10301 and Higher
CCU-550 (J) : S/N 30301 and Higher
CCU-550P (CE) : S/N 40401 and Higher

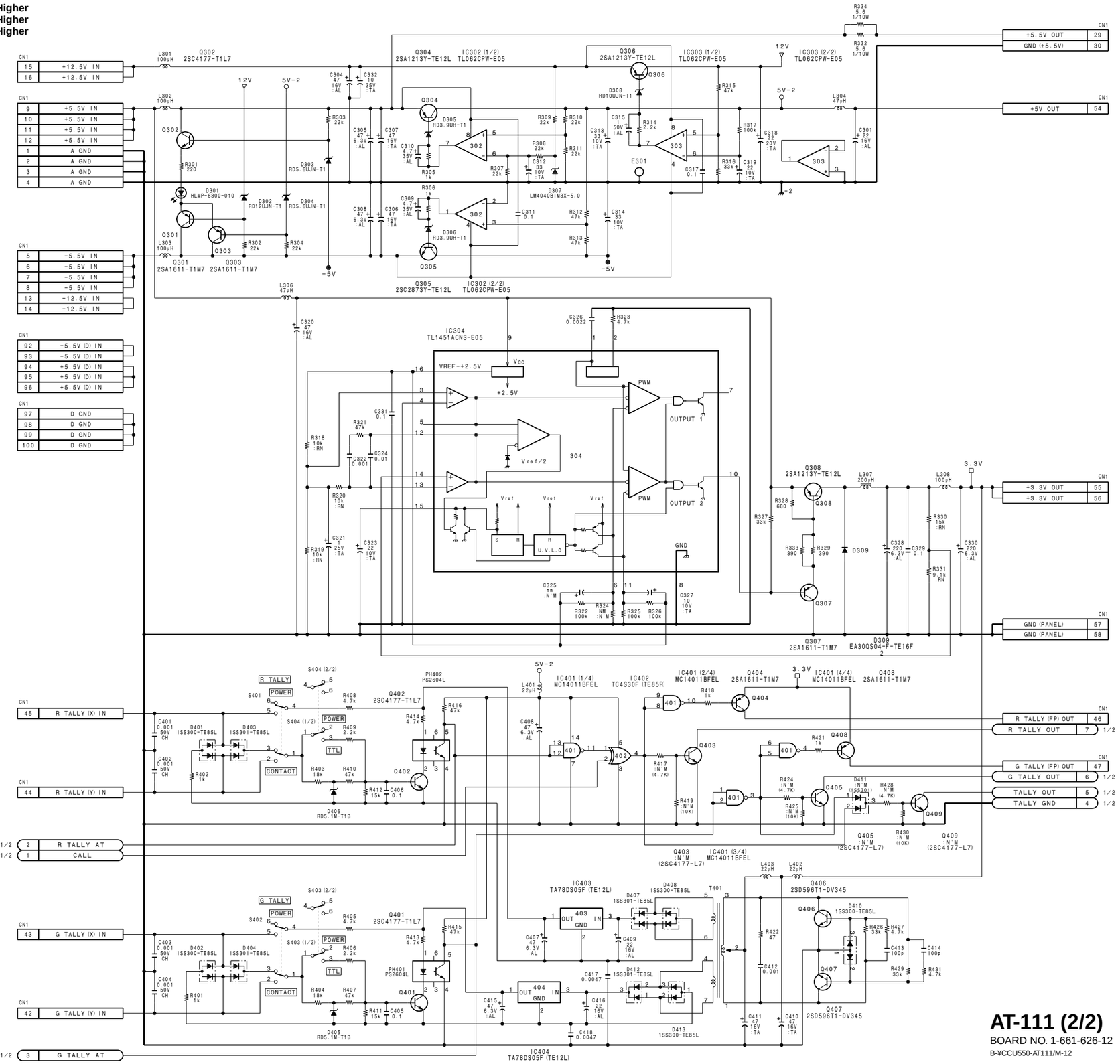

AT-111 (2/2)
BOARD NO. 1-661-626-12
B-¥CCU550-AT111/M-12

CCU-550 (UC) : S/N 10201 and Higher
CCU-550 (J) : S/N 30201 and Higher
CCU-550P (CE) : S/N 40201 and Higher

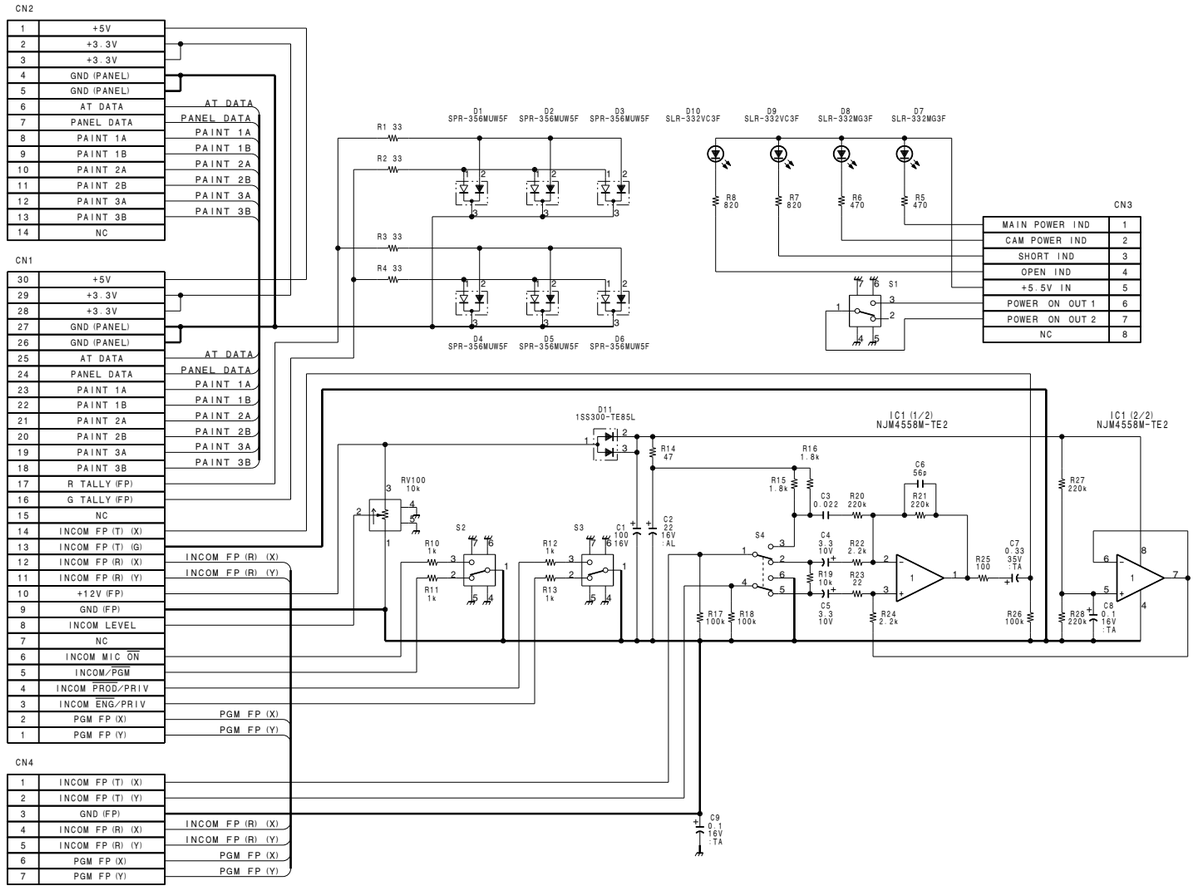

AU-236

BOARD NO. 1-661-615-12

B-¥CCU550-AU236-12

CCU-550 (UC) : S/N 10001 through 10200
CCU-550 (J) : S/N 30001 through 30200
CCU-550P (CE) : S/N 40001 through 40400

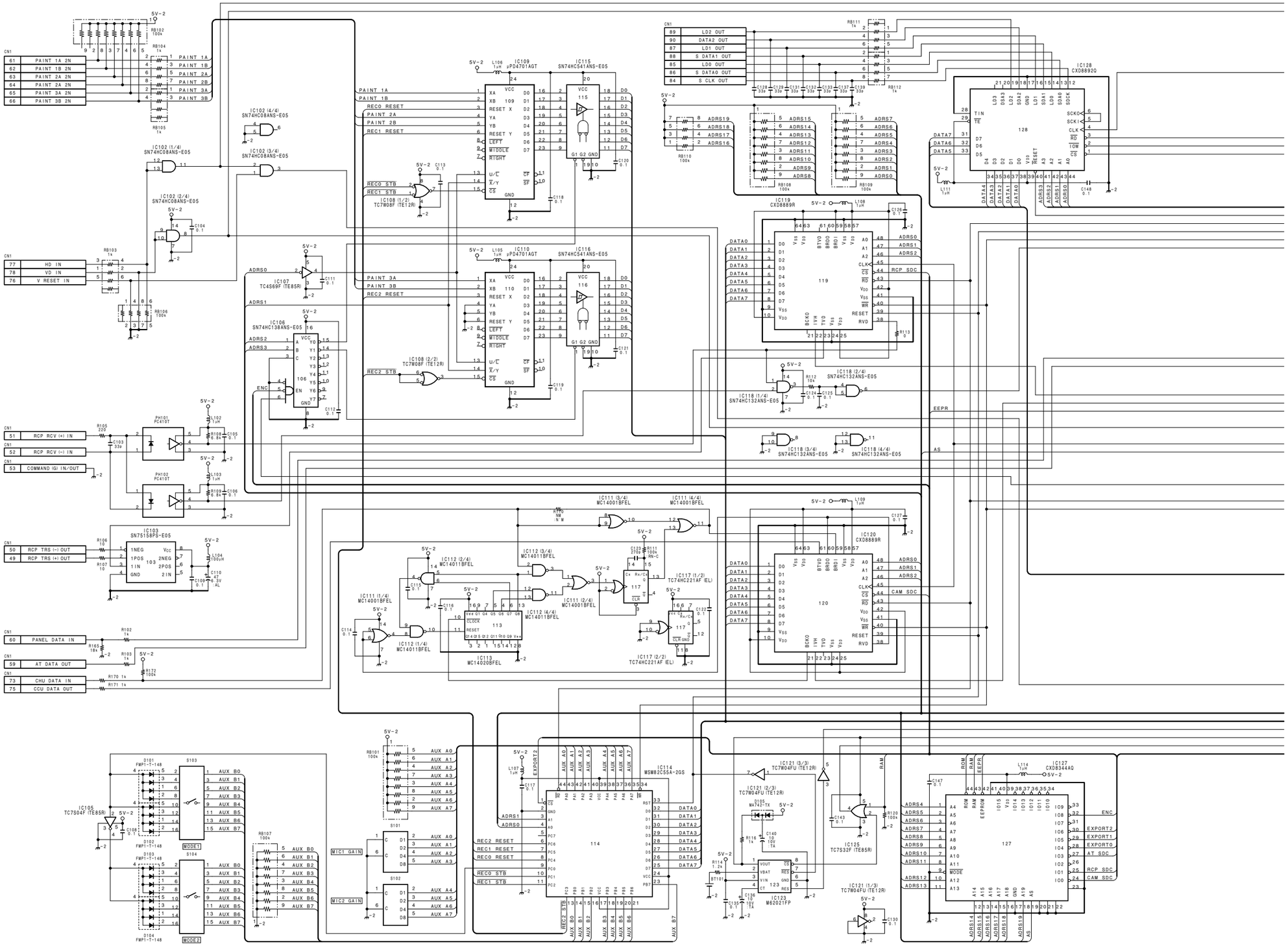

4-24 (a) 4-24 (a)

CCU-550/550P

A B C D E F G H

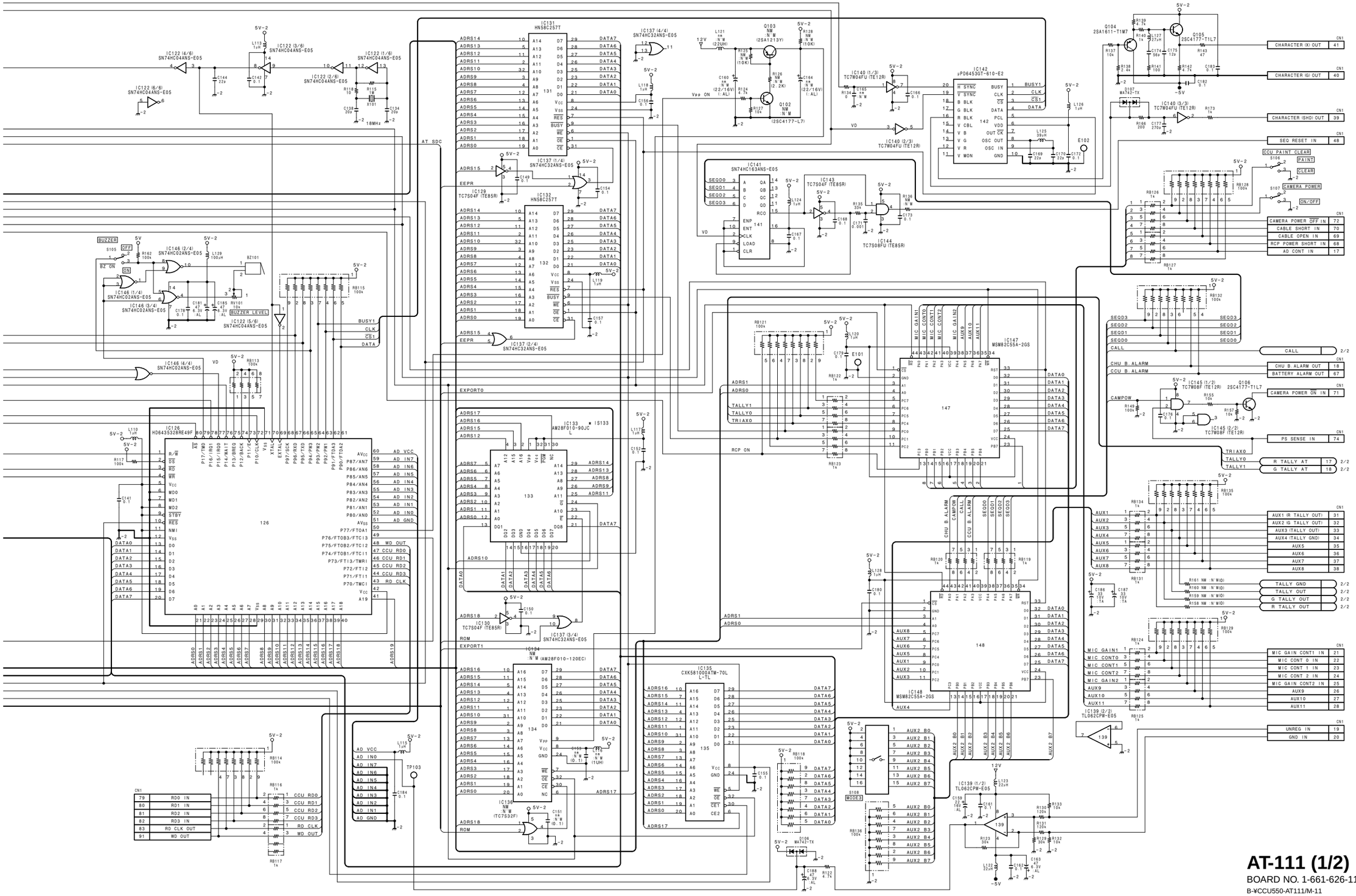

AT-111 (1/2)

BOARD NO. 1-661-626-11

B-¥CCU550-AT111/M-11

CCU-550/550P

AT-111 (2/2)

CCU-550 (UC) : S/N 10001 through 10200
CCU-550 (J) : S/N 30001 through 30200
CCU-550P (CE) : S/N 40001 through 40400

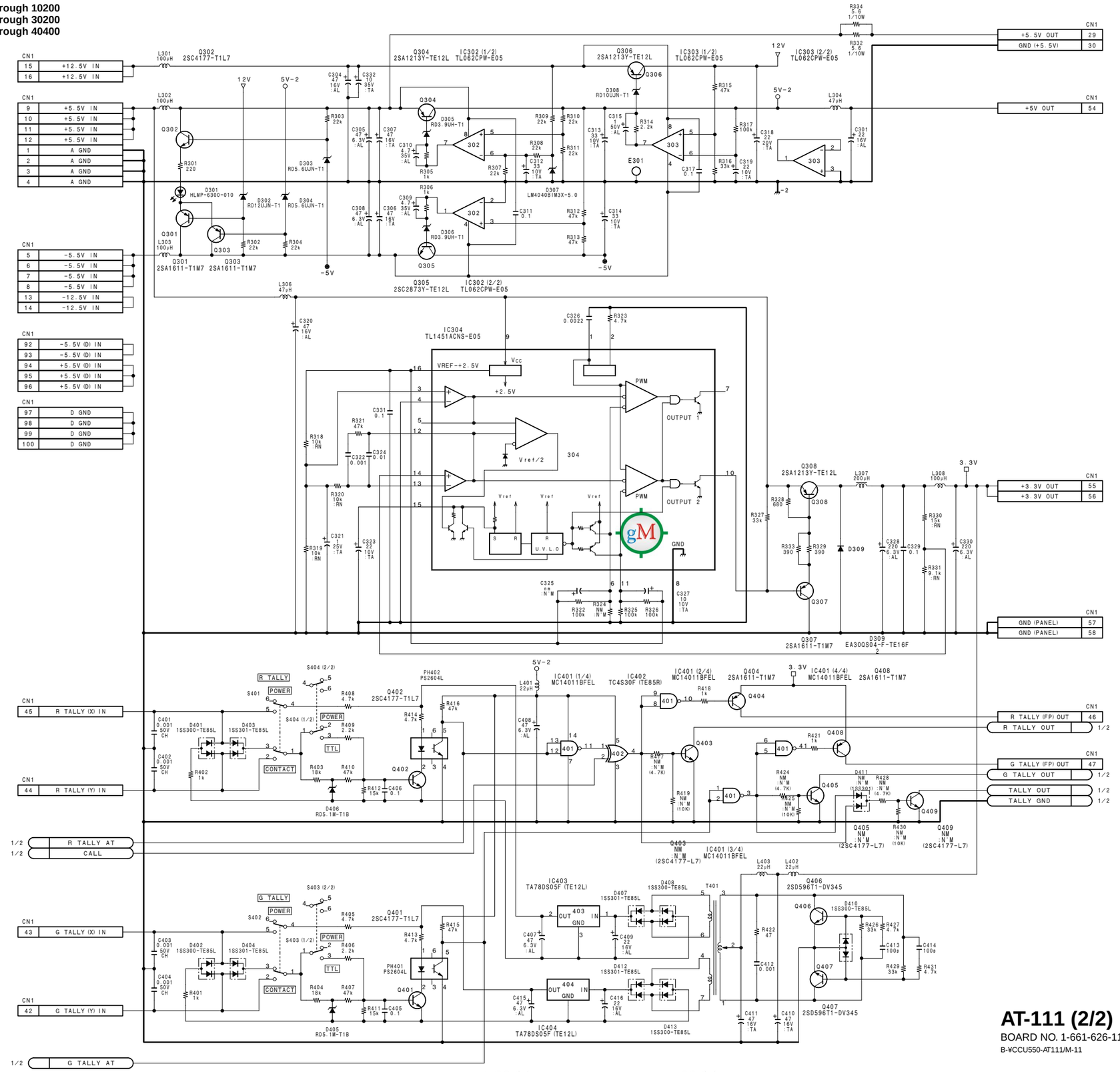

AT-111 (2/2)
BOARD NO. 1-661-626-11
B-¥CCU550-AT111/M-11

CCU-550 (UC) : S/N 10001 through 10200
CCU-550 (J) : S/N 30001 through 30200
CCU-550P (CE) : S/N 40001 through 40200

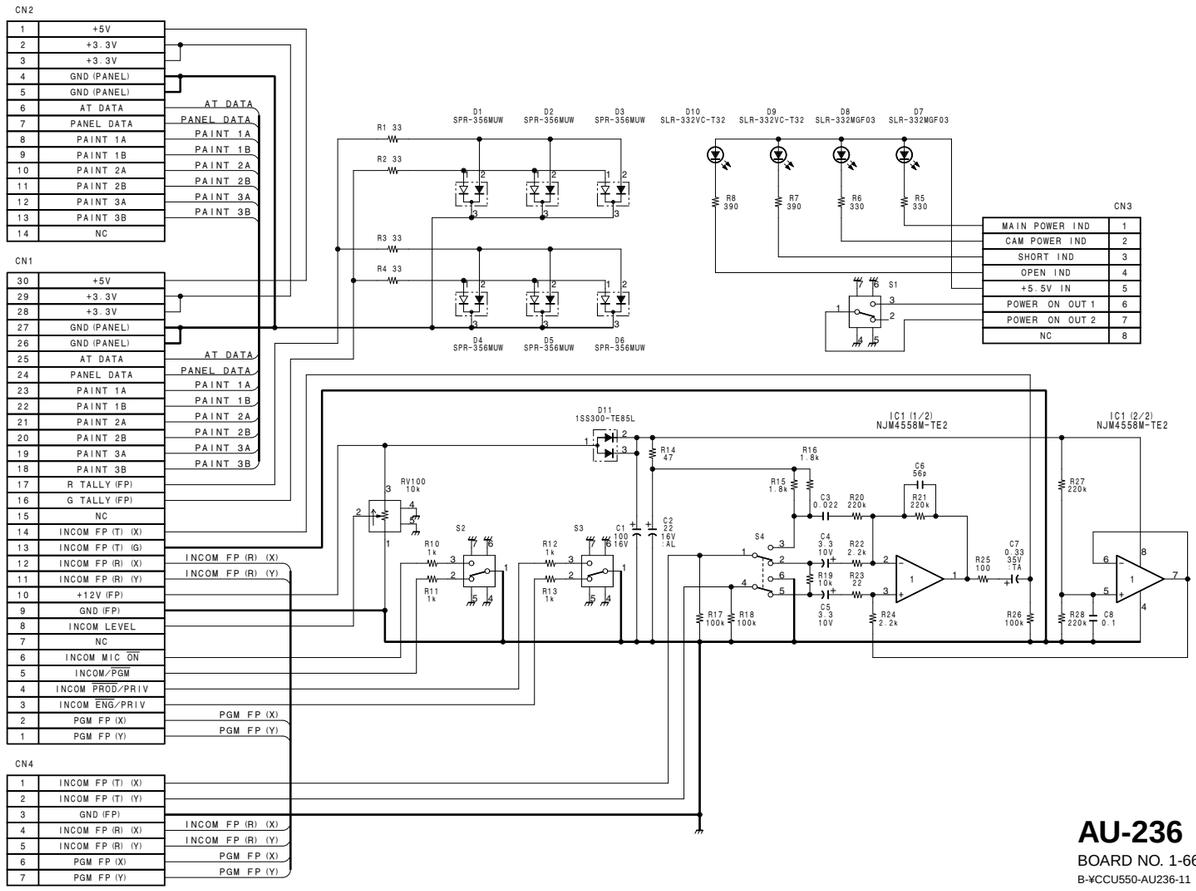

AU-236
BOARD NO. 1-661-615-11
B-¥CCU550-AU236-11

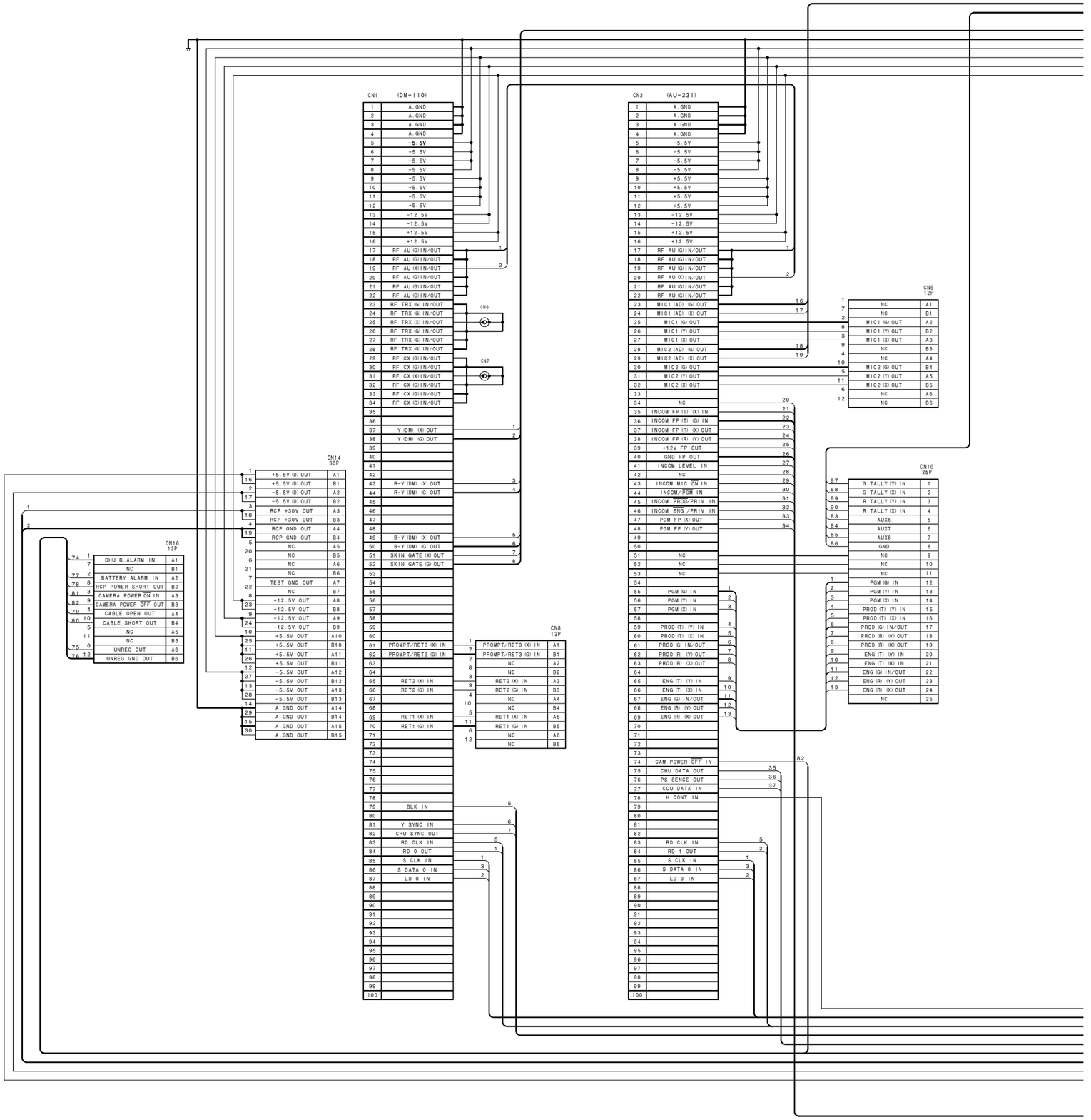
CN1 (DM-110)
CN2 (AU-231)
CN14 30P
CN16 12P
CN8 12P
CN9 12P
CN10 25P
CN6
CN7

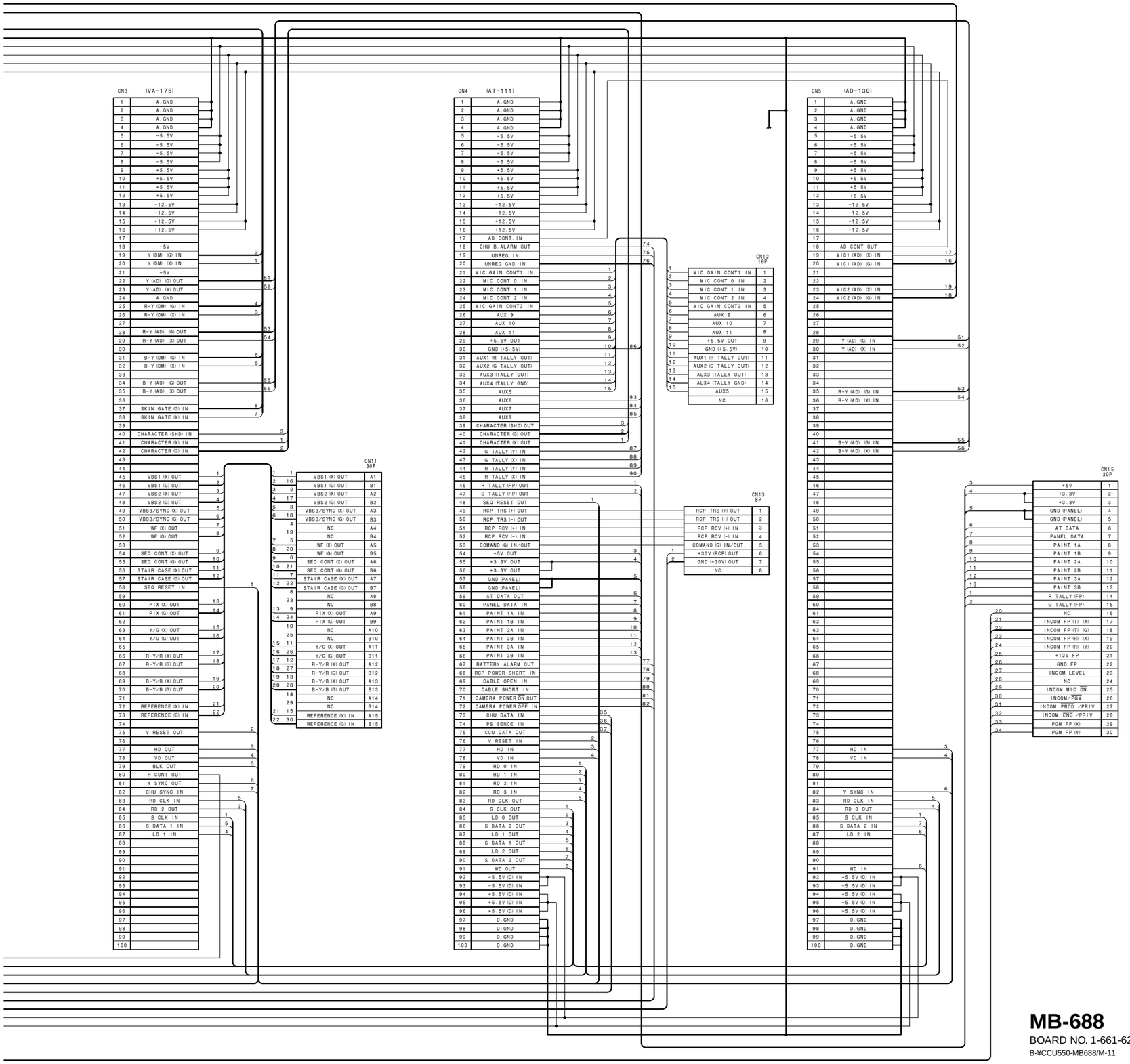

MB-688

BOARD NO. 1-661-628-11

B-¥CCU550-MB688/M-11

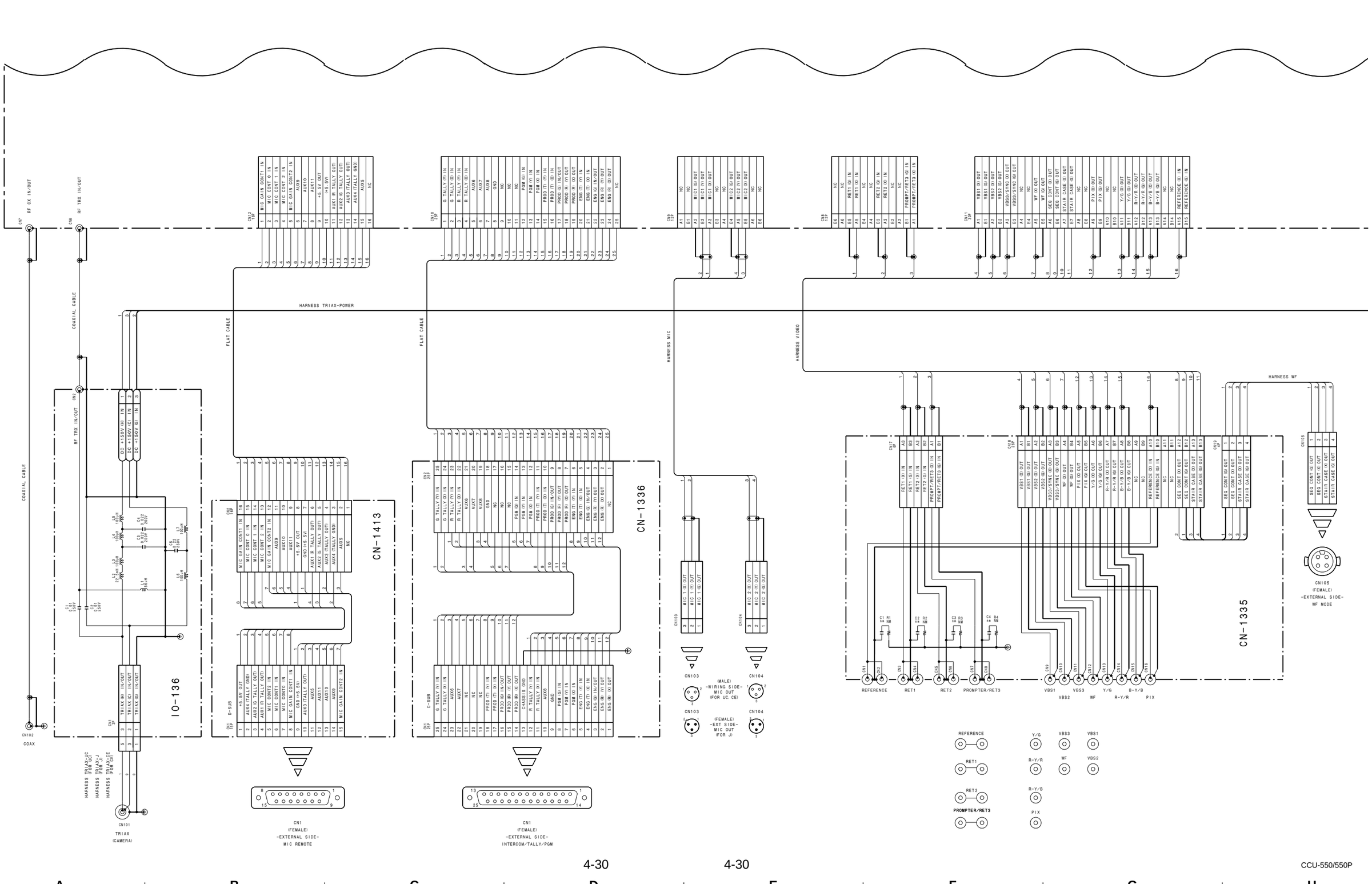

1
2
3
4
5
RF CX IN/OUT
RF TRX IN/OUT
COAXIAL CABLE
HARNESS TRIAX-POWER
FLAT CABLE
HARNESS MIC
HARNESS VIDEO
HARNESS WF
IO-136
CN-1413
CN-1336
CN-1335
CN101
TRIAX
(CAMERA)
CN102
COAX
CN1
(FEMALE)
-EXTERNAL SIDE-
MIC REMOTE
CN1
(FEMALE)
-EXTERNAL SIDE-
INTERCOM/TALLY/PGM
CN103
CN104
(MALE)
-WIRING SIDE-
MIC OUT
(FOR UC, CE)
(FEMALE)
-EXT SIDE-
MIC OUT
(FOR J)
CN105
(FEMALE)
-EXTERNAL SIDE-
WF MODE
REFERENCE
RET1
RET2
PROMPTER/RET3
VBS1
VBS2
VBS3
WF
Y/G
R-Y/R
B-Y/B
PIX

A B C D E F G H

http://getMANUAL.com
FRAME WIRING CN-1335, CN-1336, CN-1337, CN-1413, IO-136

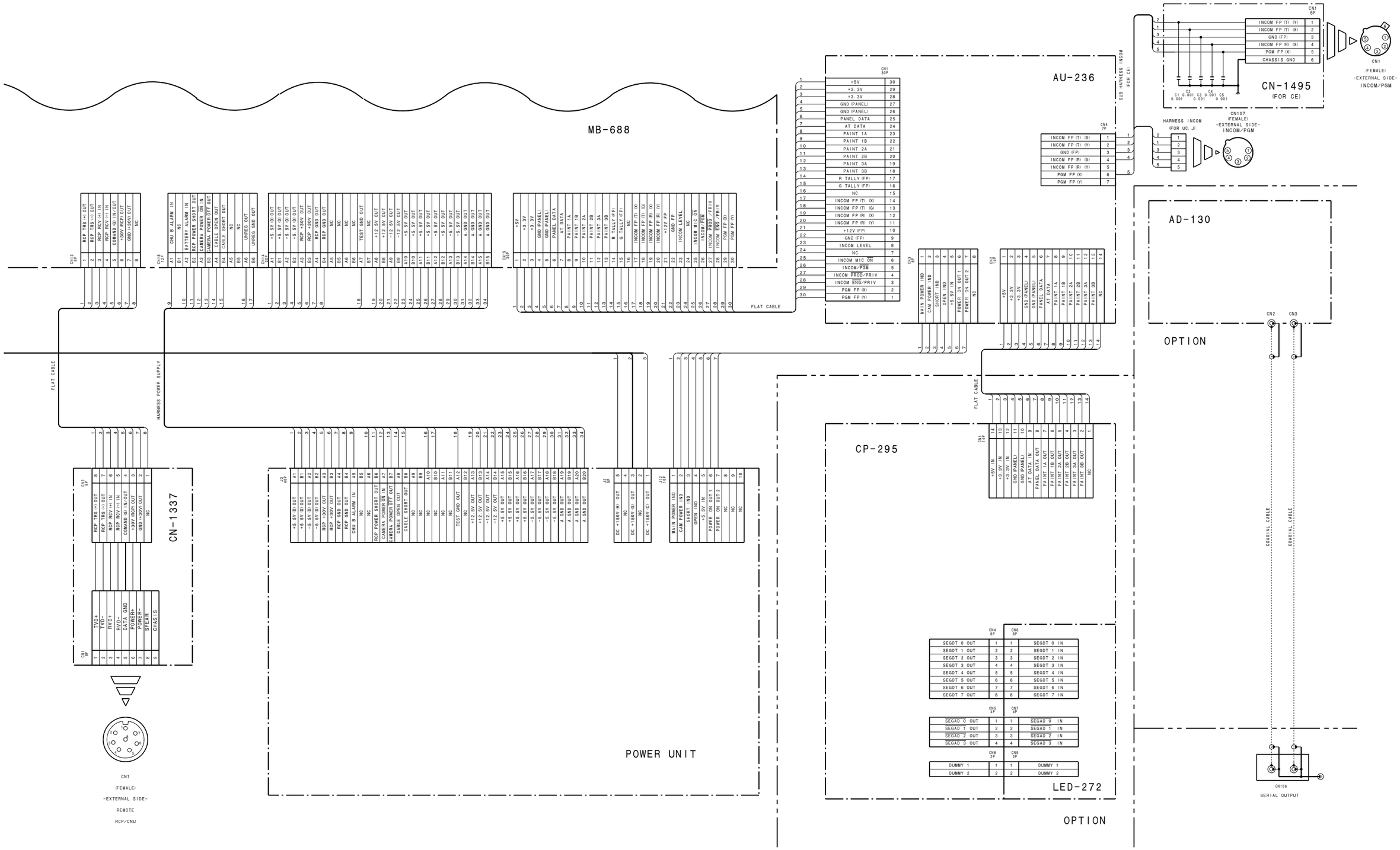

FRAME WIRING
CN-1335/1336/1337/1413/1495
IO-136
B-¥CCU550-FRAME-11

Section 5
Board Layouts

DM-110 (1-661-623-11)

CN1 N4
CN2 N5
CN3 N4
CN4 N5
CN5 D3
CN6 D5
CN7 A2
CN8 A2

CP501 J2
CP701 H5

CV901 C1

C1 N6
C2 M6
C3 M6
C4 *M6
C5 *M6
C6 *M6
C7 *M6
C8 M6
C9 M6
C10 M6
C11 N6
C12 M1
C13 *N1
C14 M1
C15 *M6
C16 *M1
C17 M6
C18 M6
C101 G3
C102 G3
C103 *G3
C104 *G3
C105 *E3
C106 *E3
C107 *E3
C108 *E3
C109 *E4
C110 *E3
C112 *E3
C115 *E3
C116 *E3
C117 *F3
C119 *F3
C120 *F4
C121 *G3
C122 *F3
C124 *F3
C127 *G3
C128 *G4
C129 *G3
C131 *G3
C132 *G3
C133 *F3
C134 *G3
C135 *F4
C165 G2
C166 G2
C167 G2
C168 *G2
C169 *H2
C170 *H2
C172 *H2
C173 *H2
C174 H2
C175 *H2
C176 *H2
C177 H2
C178 H2
C179 *H1
C180 *H1
C201 *G4
C202 G4
C203 G5
C204 *G4
C205 *G5
C206 *F4
C207 *F5
C208 *G4
C209 *G5
C210 F4
C211 F5
C212 F4
C213 *F5
C214 *F5
C215 *E4
C216 E4
C217 E4
C301 G6
C302 G6
C303 G6
C304 G6
C305 *E5
C306 *E5
C307 *E5
C308 *E6
C309 *D6
C310 *D6
C312 *D6
C313 *E6
C314 *E6
C317 *E6
C318 *E6
C319 *E6
C320 *F6
C321 *F6
C323 *F6
C324 *F6
C325 *F6
C326 *F6
C328 *F6
C329 *F6
C332 *F6
C333 *G6
C334 *G6
C335 *G6
C336 *G6
C338 *G5
C339 *G5
C340 E5
C341 F5
C342 F5
C343 G5
C344 *F6
C345 *G6
C346 *F6
C347 *E6
C365 H6
C366 H6
C367 H6
C368 *H6
C369 *H6
C370 *H6
C372 H6
C373 H5
C374 *H6
C375 *H6
C376 *H6
C377 *J6
C378 J6
C379 H6
C380 *J6
C381 *J6
C382 J6
C383 J6
C384 J6
C385 H6
C402 *H4
C403 *H4
C404 *H4
C405 *H4
C406 *H3
C407 *H4
C408 H3
C409 H3
C411 J3
C412 J3
C413 *J3
C414 *J4
C415 K3
C416 K3
C417 *J4
C418 *J3
C419 *K4
C420 *K3
C421 J3
C422 *K3
C423 *K4
C424 J3
C425 J4
C426 J4
C501 *K2
C502 *K2
C503 K3
C504 K3
C505 *K2
C506 *K2
C507 *K2
C508 *L2
C509 *L2
C510 K2
C511 *L2
C512 L1
C513 L2
C514 *K1
C515 K2
C516 K2
C517 *K1
C518 K1
C519 K1
C520 K1
C521 *J2
C522 *H2
C523 *J2
C524 *J2
C525 *L1
C526 *L2
C601 K3
C602 *L3
C603 K4
C604 L4
C606 L3
C607 L4
C608 *L4
C609 *L4
C610 *L3
C611 *L3
C612 *M3
C613 *M4
C614 *M3
C615 M4
C616 M2
C617 L3
C618 M2
C619 *L3
C620 *M3
C621 *M2
C622 M4
C623 *M4
C624 N3
C625 N3
C626 M3
C627 *M2
C628 *N2
C629 *N2
C630 *M3
C631 M2
C632 *N4
C701 *K4
C702 *K5
C703 K5
C704 K5
C706 K4
C707 K5
C708 *K5
C709 *K5
C710 *K5
C711 *K4
C712 *K4
C714 *L5
C715 M4
C716 M5
C717 *L5
C718 *L5
C719 *K5
C720 L5
C721 *L5
C722 *L5
C723 L5
C724 L5
C725 *L5
C726 *L5
C727 *L4
C728 M5
C729 *M4
C730 L4
C731 L4
C732 *H5
C733 *H5
C734 *J5
C735 *J4
C736 *M4
C737 L4
C738 L5
C739 *L5
C801 *J6
C802 *K6
C803 J6
C804 K6
C806 K6
C807 K6
C808 *K6
C810 *K6
C811 *K6
C812 *K6
C813 *K6
C815 *L6
C816 L5
C817 L6
C818 *K6
C819 *K6
C820 *K6
C821 L6
C822 *L6
C823 *L6
C824 L6
C825 L6
C826 *L6
C827 *L6
C828 *L6
C829 L6
C830 *L6
C831 L5
C832 L5
C833 J5
C834 J5
C835 J5
C836 *J6
C837 *J5
C838 *M5
C839 L5
C840 L6
C841 *L6
C901 E1
C902 E2
C903 F1
C904 F2
C905 *F1
C906 *F1
C907 *F1
C909 E2
C910 *F2
C911 *E2
C912 E1
C914 *E1
C915 E1
C916 *E2
C917 *E2
C918 E2
C919 *D2
C920 E1
C921 E1
C922 D1
C923 D2
C924 *D2
C925 *D2
C926 D1
C927 D2
C928 *D1
C929 *D2
C930 D2
C931 C1
C932 C2
C933 C1
C934 C1
C935 *C1
C936 *C1
C937 C1
C938 *C1
C939 C1
C940 C2
C941 *B1
C942 *C2
C943 C2
C944 B1
C945 *B1
C946 B1
C947 *B2
C948 F1
C949 C2
C950 *C2
C1001 *F2
C1002 *F1
C1003 *E1
C1004 *E2
C1005 D3
C1006 D2
C1008 *C3
C1009 *C3
C1010 *C3
C1011 C3
C1012 *C3
C1013 *C3
C1014 *C3
C1015 *C2
C1016 *C3
C1017 *C3
C1018 *C2
C1019 *C3
C1020 B3
C1022 *B3
C1023 B2
C1024 B3
C1025 *B2
C1026 B3
C1027 B3
C1034 *D2
C1035 *D3
C1036 *B3
C1038 *B3
C1039 *B2
C1040 A3
C1041 A3
C1042 B2
C1043 *A3
C1044 *B3

DL601 M3

D1 *M6
D2 *M6
D3 *M6
D4 A2
D5 *N6
D6 *N6
D101 *E3
D102 *E3
D103 *F3
D104 *F3
D105 *F4
D106 *G3
D107 *G3
D108 *G4
D109 *G4
D165 G2
D166 G2
D201 *G4
D202 *F4
D203 *F5
D204 *F4
D205 E5
D301 *E6
D302 *E5
D303 *F6
D304 *F6
D305 *E6
D306 *G6
D307 *G6
D308 *G6
D309 *G6
D365 H6
D366 H6
D501 *K2
D601 *L3
D602 *M2
D701 *K4
D801 *K5
D802 J5
D901 E2
D902 E1
D903 D1
D904 D1
D1001 *F2
D1002 *E2

E1 A4
E101 G1
E301 H6
E601 N3
E901 A1
E1001 A2

FB901 B1
FB902 B2
FB1001 B2
FB1002 B3
FB1003 *B2
FB1004 *A3

FL101 E3
FL301 D5
FL501 L2
FL502 J2
FL503 J2
FL601 M4
FL701 L5
FL702 J5
FL801 K6
FL901 E1
FL902 B1
FL1001 D3
FL1002 A2

IC1 *M6
IC3 N1
IC4 M1
IC5 M2
IC6 *N1
IC7 *M1
IC101 *H2
IC201 G5
IC202 F5
IC203 F5
IC204 E5
IC205 *E4
IC206 *E5
IC207 *E5
IC208 *D5
IC209 D5
IC210 D5
IC301 *E6
IC302 *G6
IC303 *J6
IC401 *H4
IC402 *J3
IC403 *J4
IC404 *J4
IC405 *J3
IC406 *K4
IC501 K2
IC502 L2
IC503 K2
IC601 L3
IC602 M4
IC603 M3
IC701 K5
IC702 L5
IC703 *M4
IC801 K6
IC802 L6
IC901 F2
IC902 *F2
IC903 *E1
IC1001 C3
IC1002 A3

LV401 H3

L1 N6
L2 N6
L3 N6
L4 M1
L101 G3
L102 G4
L103 *E3
L104 *F3
L105 *G3
L106 *G3
L107 *G4
L165 H1
L166 H2
L167 G2
L168 G1
L169 G2
L201 *G4
L202 *G5
L301 G5
L302 G6
L303 *E5
L304 E5
L305 E5
L306 *F5
L307 G5
L308 F5
L309 *F5
L310 *G5
L311 *G6
L365 J6
L366 J6
L367 H6
L368 H6
L369 H6
L401 K3
L402 K4
L501 L1
L502 L3
L503 *J1
L601 L2
L602 L4
L701 K4
L702 K5
L703 *H4
L801 K6
L802 K6
L803 J6
L804 J5
L805 *J5
L901 *E1
L902 *E2
L903 *D1
L904 *D2
L905 D2
L906 D1
L907 C2
L908 C2
L1001 *D3
L1002 *D2
L1004 B3

Q1 *M6
Q2 *M6
Q3 *N6
Q4 *N6
Q101 *E3
Q102 *E3
Q103 *E3
Q104 *E3
Q105 *E3
Q106 *E3
Q107 *F3
Q108 *F3
Q109 *F3
Q110 *G3
Q111 *G3
Q165 *H2
Q166 *H2
Q167 *G2
Q168 *H2
Q169 *H2
Q201 *G4
Q202 *G4
Q301 *E5
Q302 *D6
Q303 *E6
Q304 *E6
Q305 *E6
Q306 *F6
Q307 *F6
Q308 *F6
Q309 *F6
Q365 *H6
Q366 *H6
Q367 *H6
Q368 *H6
Q369 *H6
Q370 *H6
Q371 *J6
Q372 *J6
Q401 J4
Q402 J4
Q403 J3
Q404 *K3
Q501 *K2
Q502 *K2
Q503 *L2
Q504 *L1
Q505 *K1
Q506 *K1
Q507 J1
Q508 J1
Q509 J1
Q510 J2
Q511 *J2
Q512 *J2
Q601 *L4
Q602 *L4
Q603 *L4
Q604 *L4
Q605 *M3
Q606 *M3
Q607 *M3
Q609 *M2
Q610 *M2
Q611 *M3
Q612 *N3
Q613 *M2
Q701 *K5
Q702 *K5
Q703 *K4
Q704 *K4
Q705 *L5
Q706 *L5
Q708 *L4
Q709 *L4
Q710 *L5
Q711 *L4
Q712 *M4
Q713 *H4
Q714 *J5
Q715 *J5
Q801 *J6
Q802 *K6
Q803 *K6
Q804 *K6
Q805 *K6
Q806 *K6
Q807 *L6
Q808 *L6
Q810 *L6
Q811 *L5
Q812 *L6
Q813 *L6
Q814 *L6
Q815 *J6
Q816 *J5
Q901 *F1
Q902 F1
Q903 *F1
Q904 *F1
Q905 F1
Q906 *E1
Q907 E1
Q908 F2
Q909 F2
Q910 *D2
Q911 *D2
Q912 *D1
Q913 D1
Q914 C1
Q915 C1
Q916 C1
Q917 B1
Q918 B2
Q919 C2
Q920 B1
Q921 B2
Q922 C2
Q1001 *F2
Q1002 *D3
Q1003 *D2
Q1004 *D2
Q1005 *D2
Q1006 *C2
Q1007 *C3
Q1010 B3
Q1011 B3

RV101 G2
RV301 H6
RV401 J4
RV402 J3
RV403 J4
RV404 J3
RV501 K1
RV502 K2
RV503 H2
RV601 L3
RV602 A5
RV701 K4
RV702 A5
RV703 L5
RV704 G4
RV705 J5
RV801 J6
RV802 A5
RV803 L6
RV901 D1
RV1001 B2

R1 *M6
R2 *M6
R3 *M6
R4 *M6
R5 *M6
R6 *M6
R7 *M6
R8 *N2
R9 N1
R10 *N2
R11 N1
R12 *N2
R13 N1
R14 M1
R15 *N2
R16 *M1
R18 *N1
R20 *N2
R21 *M6
R22 *N6
R23 *N6
R24 *N6
R25 *M6
R26 M6
R101 *E3
R102 *E3
R103 *E3
R104 *E3
R105 *E3
R106 *D3
R107 *E3
R108 *E3
R109 *E3
R110 *E3
R111 *D3
R112 *E3
R113 *E3
R114 *E4
R116 *E3
R117 *E4
R118 *E3
R119 *E3
R120 *E4
R121 *F3
R122 *F3
R125 *F3
R126 *F3
R127 *F3
R129 *F3
R130 *F3
R131 *F3
R132 *F4
R133 *F3
R134 *F3
R135 *F4
R137 *F3
R138 *F4
R139 *G3
R140 *G3
R141 *F4
R142 *G3
R143 *G3
R146 *G3
R147 *F3
R148 *F3
R149 *G3
R150 *G3
R165 G2
R166 G2
R167 G2
R168 G1
R169 G2
R170 *G2
R171 *G2
R172 *H2
R173 *G2
R174 *H2
R175 *H2
R176 *G2
R177 *G2
R178 *G2
R179 *G1
R180 *H2
R181 *H1
R182 *H1
R183 *H2
R184 *H1
R185 *H2
R186 *H2
R201 *G4
R202 *G4
R203 *G4
R204 *G5
R205 *G4
R206 *F4
R207 *G4
R208 G4
R209 G4
R210 G4
R211 G5
R212 F4
R213 F4
R214 *F5
R215 F5
R216 F5
R217 E4
R218 E4
R219 *F4
R220 *F4
R221 *F4
R222 F4
R223 *E4
R225 E5
R226 E5
R227 E4
R228 D4
R229 D4
R230 *D5
R231 *D5
R232 *D4
R233 G4
R234 F4
R235 *F4
R236 F5
R237 F5
R301 *E5
R302 *E5
R303 *E6
R304 *E6
R305 *E6
R306 *D6
R307 *E6
R308 *D6
R309 *E6
R310 *D6
R311 *E6
R312 *D6
R313 *E6
R314 *E6
R315 *E6
R316 *E6
R317 *E6
R318 *E6
R319 *E6
R320 *E6
R321 *F6
R324 *F6
R325 *F6
R326 *F6
R328 *F6
R329 *F6
R330 *F6
R331 *F6
R332 *F6
R333 *F6
R334 *F6
R335 *F6
R336 *F6
R337 *G6
R338 *F6
R339 *G6
R340 *F6
R341 *G6
R344 *G6
R345 *F6
R346 *E6
R347 *G6
R348 *G6
R365 H6
R366 H6
R367 H6
R368 H6
R369 H6
R370 *H6
R371 *H6
R372 *H6
R373 *H5
R374 *H6
R376 *H6
R377 *H6
R378 *H6
R379 *H6
R380 *J6
R381 *H6
R382 *H6
R383 *J6
R384 *J6
R385 *H6
R386 *J6
R387 *J6
R388 *J6
R389 *J6
R390 *J6
R391 *J6
R392 *J6
R393 *J6
R394 *J6
R401 *H4
R402 *H4
R403 *H4
R404 *H3
R405 H3
R406 H3
R407 J3
R408 J3
R409 *J3
R410 J3
R411 J4
R412 J4
R413 K4
R414 *J3
R415 H4
R416 J4
R417 J4
R418 J4
R419 J4
R420 *J4
R421 J4
R422 J4
R423 J4
R424 *J3
R425 J3
R426 J3
R427 K3
R428 K3
R429 *K4
R430 *K4
R431 *K4
R432 *K3
R433 *K3
R434 *K3
R435 K3
R436 K4
R437 K4
R438 K4
R439 K3
R440 K4
R441 *K3
R442 *K3
R501 *K2
R502 *K2
R503 *K2
R504 *K2
R505 *K2
R506 *K2
R507 *K3
R508 *K2
R509 *K2
R510 K3
R511 K3
R512 K3
R513 K3
R514 K3
R515 *K2
R516 K2
R517 *K2
R518 K2
R519 *K2
R520 *K2
R521 *K2
R522 *L2
R523 *L2
R524 *L2
R525 *L2
R526 *L2
R527 *L2
R528 *L2
R529 *L1
R533 *L2
R534 *K2
R535 *K2
R536 *K2
R537 *K1
R538 *K2
R539 *K1
R540 *K1
R541 *K2
R542 *K2
R543 K2
R544 K2
R545 *K1
R546 *K1
R547 *K1
R548 K1
R549 K1
R550 *J1
R551 *J1
R552 *J1
R553 *J1
R554 J1
R555 J2
R556 J2
R557 J2
R558 *J2
R559 *J2
R560 *J2
R561 *J2
R562 *J2
R563 J2
R564 *J2
R565 J2
R566 *H2
R567 K2
R568 K2
R601 K3
R602 *L3
R603 *L3
R604 *L3
R605 *L3
R606 *L3
R607 *L3
R608 L4
R609 L4
R610 L4
R611 L4
R612 L4
R613 *L4
R614 *L4
R615 *L3
R616 *L4
R617 *L3
R618 *L3
R619 *L3
R620 *L4
R622 *L3
R623 *L3
R624 *L4
R625 *M4
R626 *M4
R627 *M4
R628 *M3
R629 *M3
R630 *M3
R631 *M3
R632 *M3
R633 M3
R634 M3
R635 *L2
R636 *M3
R637 L2
R638 M2
R639 M3
R640 *M3
R641 *M3
R642 *M3
R643 *M2
R644 L3
R645 *M2
R646 L2
R647 M4
R648 *M4
R649 *M3
R650 *M3
R651 *N3
R652 *N3
R653 *N3
R654 N4
R655 N4
R656 M3
R657 *M2
R658 *M2
R659 *M3
R660 *N3
R661 *N3
R662 *M3
R663 *N2
R664 *N2
R665 M2
R666 M2
R667 M2
R668 M2
R669 N4
R670 *N4
R671 *M4
R672 *M4
R674 M3
R701 *K4
R702 *K4
R703 *K5
R704 *K5
R705 *K5
R706 *K4
R707 K5
R708 K5
R709 K5
R710 K5
R711 K5
R712 *K5
R713 *K5
R714 *K5
R715 *K5
R716 *K5
R717 *K5
R718 *K5
R719 *K5
R720 *K5
R721 *K4
R722 *K5
R723 *K4
R725 K4
R726 L5
R727 *L5
R728 *K5
R729 *L5
R730 *L5
R731 *L5
R732 *K5
R733 *K5
R734 *L5
R735 *L5
R736 *L5
R737 *L5
R738 *L4
R739 *L4
R740 *L4
R741 *L4
R743 *L5
R744 *L5
R745 *M5
R746 *L5
R747 *L5
R748 *L5
R749 *L5
R750 *M5
R751 *L4
R752 M5
R753 *M5
R754 *M4
R755 *L5
R756 *L5
R757 *L4
R758 L4
R759 L4
R760 L4
R761 *G4
R762 *H4
R763 *H5
R764 *H4
R765 *J5
R766 *H5
R767 *J4
R768 *J5
R769 *J5
R770 *J5
R771 *J4
R772 *M4
R773 *M4
R774 *M4
R775 *M4
R776 *H5
R777 *M5
R778 *L5
R779 *L5
R780 *L5
R781 *L5
R801 *J6
R802 *J6
R803 *J6
R804 *J6
R805 *K6
R806 *K6
R807 J6
R808 J6
R809 K6
R810 K6
R811 K6
R812 *J6
R813 *J6
R814 *K6
R815 *J6
R816 K6
R817 *K6
R818 *K6
R819 *K6
R820 *K6
R821 *K6
R822 *K6
R823 *K6
R824 *K5
R826 K6
R827 K6
R828 *K6
R829 *K6
R830 *K6
R831 *L6
R832 *L6
R833 *K6
R834 *K6
R835 *K6
R836 *L6
R837 *L6
R838 *L6
R839 *L6
R840 *K5
R841 *K6
R842 *K6
R844 *L6
R845 *L6
R846 *L6
R847 *L6
R848 *L6
R849 *L6
R850 *L6
R851 *L6
R852 L6
R853 *L6
R854 *L6
R855 *L6
R856 *L6
R857 *L6
R858 L6
R859 L6
R860 L5
R861 J6
R862 J5
R863 *J6
R864 *J5
R865 *J5
R866 *M5
R867 *M5
R868 *M4
R869 *M4
R870 *L6
R871 *L6
R872 *L6
R873 *L6
R874 *L6
R901 *F1
R902 *F1
R903 F1
R904 *F1
R905 F1
R906 *F1
R907 F1
R908 *F1
R909 *F1
R910 F1
R911 *F1
R912 *F1
R913 *F1
R914 *F1
R915 F1
R916 *F1
R917 F1
R918 *F1
R919 F1
R920 *E1
R921 *E1
R922 E1
R923 F1
R924 F1
R925 F2
R926 F2
R927 F2
R928 E2
R929 E2
R930 E2
R931 *F2
R932 *E2
R933 E2
R934 *E2
R935 E2
R936 E1
R937 E1
R939 E2
R940 E2
R941 *E1
R942 *D2
R943 D2
R944 *E2
R945 *E2
R946 *D1
R947 *D2
R948 *D1
R949 *D1
R950 *D2
R951 D2
R952 *D1
R953 *D2
R954 D2
R955 C1
R956 C1
R957 C1
R958 C1
R959 C1
R960 C1
R961 C1
R962 *C1
R963 *C1
R964 C1
R965 C1
R966 C1
R967 C2
R968 C2
R969 *B1
R970 B2
R971 B1
R972 C2
R973 B1
R974 B2
R975 B1
R976 F1
R977 F1
R978 F1
R979 *C2
R980 *C2
R981 C1
R982 C2
R1001 *F2
R1002 *F2
R1003 *F2
R1004 *F2
R1005 *F2
R1006 *F2
R1007 *F1
R1008 *E1
R1009 *E1
R1010 *E1
R1011 *E2
R1012 *E2
R1013 *D3
R1014 *D3
R1015 *D2
R1016 D2
R1017 *C2
R1019 *C3
R1021 *D3
R1022 *C3
R1023 *C3
R1024 *C2
R1025 *C2
R1026 *C3
R1027 B3
R1030 B3
R1032 B3
R1033 B3
R1034 B3
R1035 B3
R1037 *B3
R1038 *B3
R1045 B3
R1046 A3
R1047 B3
R1048 B2
R1049 *A3
R1050 B2
R1051 F2
R1052 *E2

SWF100 C2

S101 H2
S201 E4
S202 D4
S301 J6
S1001 F2

TP101 H2
TP102 H1
TP201 F4
TP301 H5
TP302 H6
TP401 H4
TP402 K4
TP403 K3
TP404 K4
TP405 K3
TP501 L2
TP502 K1
TP503 J2
TP601 A3
TP602 M3
TP701 A4
TP702 L4
TP703 J5
TP801 A4
TP802 L6
TP901 A2
TP1001 A2

* : B SIDE

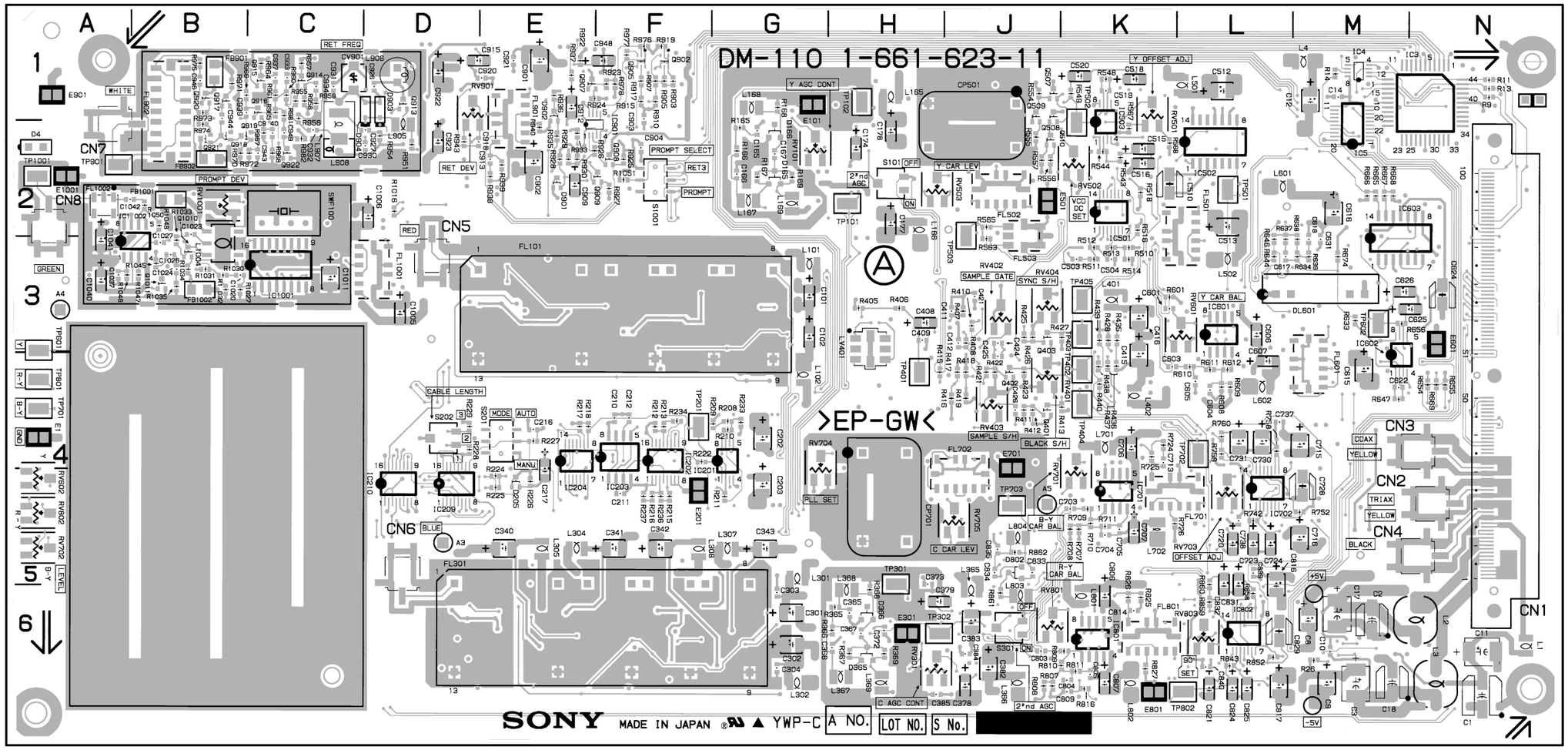

DM-110 -A SIDE-
1-661-623-11

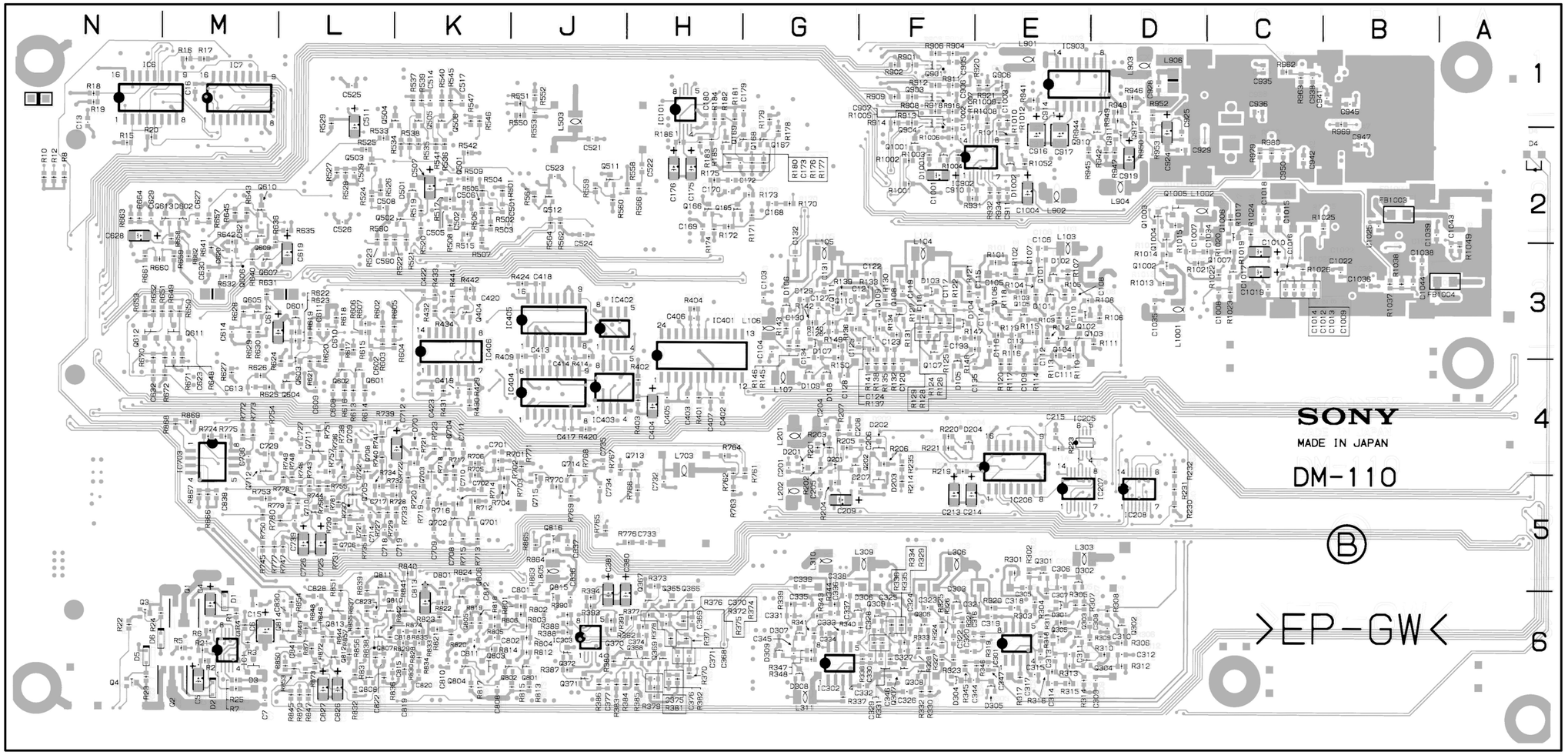

DM-110 -B SIDE-
1-661-623-11

VA-175A (1-661-625-12)

CN1	N4	C416	*L2	C1106	D5	C1417	*B4	C1801	N1	IC901	G5	L902	*F4	Q403	*H6	Q1402	*F2	R1	*N5	R224	*L6	R339	*L4
		C417	L2	C1107	*D5	C1418	*B3	C1802	N1	IC902	G5	L1001	*E4	Q404	*H6	Q1403	*E2	R2	*N5	R226	*L6	R340	*K4
CP1501	C2	C418	L2	C1108	*D5	C1419	*B3	C1803	*N1	IC903	*G5	L1002	*E4	Q405	*H6	Q1404	*E3	R3	*N5	R227	*L5	R341	*K4
CP1502	C1	C502	*H5	C1109	D5	C1421	*C3	C1804	*N1	IC904	*F5	L1003	*E4	Q406	L2	Q1405	*E3	R4	*N5	R228	L5	R342	*L4
		C504	H5	C1110	*C5	C1423	*C3	C1805	*M1	IC1001	D4	L1101	*F5	Q501	*H6	Q1501	*C1	R5	*N5	R229	L5	R344	*K5
CV1202	L3	C505	*H6	C1111	*C5	C1424	*D3	C1806	*M1	IC1002	*D4	L1102	*F5	Q502	*H5	Q1502	*D2	R6	*N5	R230	*L5	R346	*K5
		C506	H5	C1112	*C5	C1425	*D3	C1807	*M1	IC1003	D4	L1103	*B5	Q503	*H5	Q1503	*E1	R7	*N5	R231	*L5	R347	*K4
C1	M6	C507	H6	C1113	*C5	C1426	*D3	C1808	*N1	IC1101	*B5	L1104	B5	Q504	*H5	Q1504	*C1	R8	*N5	R232	*L6	R348	*K4
C2	N6	C508	H6	C1115	*C5	C1427	*D3	C1809	M1	IC1102	B5	L1105	B5	Q505	J2	Q1505	*C1	R9	*N6	R233	K6	R349	*K4
C3	M6	C509	*H6	C1116	C5	C1428	*D3	C1810	*M1	IC1201	*E6	L1201	*F6	Q601	*H5	Q1601	*A3	R10	*N6	R234	*L6	R350	K4
C4	N6	C510	*H5	C1117	*B5	C1429	D4	C1812	*M2	IC1202	M3	L1202	*F6	Q602	*H4	Q1602	*A4	R11	*N6	R235	*L5	R352	*K4
C5	*M6	C512	*J2	C1118	*C5	C1430	*D3			IC1203	L3	L1203	*E6	Q603	*H4	Q1701	*G3	R12	*M6	R236	*L5	R353	*K5
C6	*N6	C513	J2	C1119	*B5	C1431	E2	DL1201	C6	IC1301	J1	L1204	*E6	Q604	*H4	Q1702	*G3	R13	*M6	R237	*L5	R354	*K5
C7	*M6	C514	*K2	C1120	*B5	C1432	E3			IC1401	B3	L1205	*M3	Q605	H4	Q1703	*G3	R14	*M6	R238	*L5	R355	*K4
C9	*N6	C515	*J2	C1121	B5	C1433	*D3	D1	A2	IC1402	*B3	L1206	*K2	Q606	H4	Q1704	*F3	R15	*N6	R239	*K5	R356	K4
C12	L6	C516	K2	C1122	B5	C1434	*D3	D2	*N6	IC1403	*F2	L1301	*L1	Q607	H2	Q1705	F3	R16	*M6	R240	*K5	R357	*K5
C13	N6	C517	K2	C1123	B5	C1435	*D3	D3	*N6	IC1404	B4	L1302	*L1	Q701	*G6	Q1706	F3	R17	*M6	R241	*L5	R358	*J5
C14	*L6	C602	*H4	C1124	*B5	C1436	D3	D4	*M6	IC1405	C3	L1303	K1	Q702	*G6	Q1707	F3	R18	*M6	R242	*K6	R359	*J5
C15	*N6	C604	*H4	C1126	B5	C1437	E3	D5	*M6	IC1409	D3	L1304	*J1	Q703	*G6	Q1708	*F3	R19	*M6	R244	*K6	R360	*K5
C16	N5	C605	H5	C1127	A5	C1438	*E3	D6	*L6	IC1410	D4	L1401	*B2	Q704	*G6	Q1709	*F3	R20	*M6	R245	*K5	R361	*K4
C17	N5	C606	H4	C1128	A4	C1439	C3	D7	*N6	IC1411	D3	L1402	*B4	Q709	G6	Q1710	F3	R21	*M6	R246	*K5	R362	*K4
C18	*N5	C607	H5	C1129	*B5	C1440	*C4	D8	*M6	IC1412	C3	L1403	*B4	Q710	G6	Q1711	F3	R22	*M6	R247	*K5	R363	*K4
C19	*N5	C608	H5	C1130	*A5	C1441	*E3	D301	*L4	IC1414	C4	L1404	*F2	Q711	G6	Q1712	E3	R23	*M6	R248	K5	R364	*K4
C101	L6	C609	*H5	C1131	*B5	C1442	*E3	D302	L4	IC1501	D3	L1405	E3	Q712	G6	Q1713	*E3	R101	*L6	R250	*K5	R365	*J4
C102	L6	C610	*H4	C1132	*B5	C1443	*E3	D801	*G5	IC1502	*C3	L1406	*E3	Q713	*K3	Q1801	*M1	R102	*L6	R251	*K6	R366	*J5
C103	*L6	C611	H4	C1133	*A5	C1501	*F1	D802	*G6	IC1503	C3	L1501	*B1	Q801	*G5	Q1802	*M1	R103	*L6	R252	*K6	R367	K5
C104	*L6	C612	H4	C1134	*A5	C1502	F1	D803	*G6	IC1504	*C2	L1502	*F1	Q802	G5	Q1803	*M1	R104	*K6	R253	*K5	R368	*K4
C105	*K6	C613	H4	C1135	*A6	C1503	B1	D804	*F6	IC1505	*C2	L1503	*C1	Q803	*G6	Q1804	*N1	R105	*K6	R254	K5	R370	J5
C106	*K6	C615	*H2	C1136	B4	C1504	*C2	D805	*H3	IC1506	D2	L1504	*C1	Q804	G6			R107	*K6	R255	*K6	R371	J4
C107	K6	C616	H2	C1137	*A4	C1505	*D3	D901	*G4	IC1507	D1	L1505	*G2	Q805	*G6	RB401	H6	R108	*K6	R256	*J6	R372	*J4
C108	*K6	C617	*J2	C1138	*A4	C1506	*D2	D902	G5	IC1508	*E2	L1601	*B2	Q806	G6	RB501	H6	R109	L6	R257	*J6	R373	J4
C110	K6	C618	*H2	C1201	F6	C1507	*C3	D903	*F4	IC1509	E2	L1602	*A1	Q807	*G6	RB601	H5	R110	K6	R258	*K6	R374	*J4
C111	*J6	C619	J2	C1202	F6	C1508	C3	D1001	*D4	IC1510	F2	L1603	*B1	Q808	G6	RB1101	E5	R111	K6	R259	*K5	R375	J4
C112	*K6	C620	J2	C1203	*F6	C1509	C2	D1003	*D4	IC1601	A2	L1604	*B4	Q809	*F5	RB1102	D5	R112	K6	R260	*K5	R376	K4
C113	*K6	C701	G6	C1204	*F6	C1510	*B2	D1301	K1	IC1602	*A3	L1701	*J1	Q814	G3	RB1701	G3	R113	K6	R261	*K5	R377	J4
C201	M5	C702	*G6	C1205	*F6	C1511	*B1	D1303	*J1	IC1603	*A2	L1702	*J1	Q815	*H3	RB1702	G3	R115	*K6	R262	*K5	R378	M4
C202	M6	C703	*G6	C1209	*E6	C1512	*C2	D1401	*C3	IC1604	A2	L1703	*F2	Q817	*H3	RB1703	F3	R116	K6	R263	*J5	R379	*L5
C203	*M5	C704	G6	C1210	*E6	C1513	*C1	D1402	*D3	IC1605	*A2	L1704	G1	Q820	*H3	RB1801	M2	R117	*K6	R264	*J6	R380	*L4
C204	*M6	C705	*G6	C1211	*E6	C1514	*C1	D1403	*D3	IC1606	*B2	L1705	G1	Q821	*H3	RB1802	M2	R118	*K6	R265	K5	R381	*L4
C205	*M6	C706	*G6	C1212	E6	C1515	*C1	D1404	*E3	IC1607	B2	L1801	*N1	Q822	J2			R119	*K6	R266	*K5	R382	J5
C206	*M6	C707	*G6	C1213	E6	C1516	*C1	D1405	*E3	IC1701	*G1	L1802	*N1	Q823	H3	RV101	K6	R120	*K6	R268	J6	R383	*J4
C207	*M5	C708	*F6	C1214	B6	C1517	*B1	D1406	*D3	IC1702	G1			Q824	*H3	RV102	J6	R121	*K6	R269	J5	R384	*J4
C208	*M5	C710	J3	C1215	*B6	C1518	*G2	D1601	B3	IC1703	G2	Q1	*M6	Q825	*H3	RV103	J6	R122	K6	R270	*J6	R385	*J4
C209	*M5	C711	K3	C1216	*A6	C1519	G1	D1801	*N1	IC1704	*G2	Q2	*N6	Q901	*F4	RV201	L5	R123	*J6	R271	*J5	R386	*K4
C211	L6	C712	K3	C1217	B6	C1520	*D2	D1802	*N1	IC1705	*G2	Q3	*M6	Q902	*F4	RV202	L5	R124	*K6	R272	*J5	R387	K4
C212	*L5	C713	K3	C1218	A6	C1521	*D2			IC1801	M1	Q4	*N6	Q903	*F4	RV203	L6	R125	K6	R273	J5	R401	*J6
C213	L5	C714	*J2	C1219	*B6	C1522	*D2	E1	N6	IC1802	*M1	Q5	*L6	Q904	G5	RV204	J5	R126	K6	R274	J5	R402	*J6
C214	*M5	C715	J3	C1220	K3	C1523	*D1	E701	F6	IC1803	*N1	Q6	*N6	Q905	*G4	RV301	L4	R127	K6	R275	J5	R403	H6
C215	L5	C801	G5	C1221	M3	C1524	D2	E1101	C4	IC1804	N1	Q101	*L6	Q1001	*D4	RV302	L4	R128	*K6	R276	M5	R404	*H6
C216	*L6	C802	*G6	C1223	*L3	C1525	D2	E1301	H2	IC1805	M2	Q102	*K6	Q1002	*D4	RV303	M5	R129	*J6	R277	*L6	R405	*H6
C217	L5	C803	*G5	C1224	L3	C1526	*E2	E1701	E3	IC1806	M2	Q103	*K6	Q1003	C4	RV304	J5	R130	*K6	R278	*L5	R406	H6
C219	K5	C804	G6	C1226	*M3	C1527	*E1	E1801	N2	IC1807	*M2	Q104	*K6	Q1004	C4	RV401	J6	R131	*K6	R279	K6	R408	*H6
C220	*K6	C806	H3	C1227	*M3	C1528	*E2			IC1808	*M2	Q105	*K6	Q1101	*E5	RV402	J6	R132	*K6	R280	*L5	R409	*H6
C221	K5	C807	H3	C1230	*L3	C1529	*N3	FL801	H2	IS1503	C2	Q106	K6	Q1102	*E5	RV403	H6	R133	J6	R281	*J5	R410	H6
C222	*K5	C808	*H3	C1232	*L3	C1601	B2	FL1101	D5			Q107	K6	Q1103	*D5	RV405	K2	R134	*J6	R282	*J5	R411	*J6
C223	*K5	C809	*H3	C1233	L2	C1602	*A2	FL1103	C5	JC1401	E3	Q108	*K6	Q1104	*D5	RV406	K2	R135	*J6	R283	*J5	R412	*J6
C224	*J5	C812	*J3	C1301	L1	C1603	*A1	FL1104	A5	JC1501	*D3	Q109	*J6	Q1105	*D5	RV407	J5	R136	*J6	R284	*J5	R413	H6
C225	*J5	C814	J3	C1302	L1	C1604	A1	FL1105	A4	JC1503	*D3	Q110	*J6	Q1106	*C5	RV501	J6	R137	*J6	R285	*K5	R414	H6
C301	M4	C815	J2	C1303	*L1	C1605	*A2	FL1201	F6	JC1505	*D3	Q111	*J6	Q1107	*C5	RV502	J5	R138	*J6	R286	K5	R416	H6
C302	M5	C816	H3	C1304	*L1	C1606	*B2	FL1601	A3	JC1508	*D2	Q112	*J6	Q1108	*B5	RV503	H5	R139	J6	R301	*M5	R417	H6
C303	*M4	C817	*J2	C1305	L1	C1607	*B2			JC1509	*D2	Q113	*J6	Q1109	*B5	RV505	J2	R140	J6	R302	*M4	R418	*H6
C304	*M5	C818	*J3	C1306	L1	C1608	B2	IC1	*M6	JC1511	*D2	Q114	*J6	Q1110	*B5	RV601	J5	R141	*J6	R303	*M5	R419	*H6
C305	*M5	C819	J3	C1307	L1	C1609	*B2	IC101	K6	JC1513	*D1	Q201	*M5	Q1111	*A5	RV602	J4	R142	*J6	R304	*M5	R420	H6
C306	*M5	C901	G5	C1308	K1	C1610	B2	IC102	K6	JC1516	E1	Q202	*L5	Q1112	*A6	RV603	H4	R143	*J6	R305	M4	R421	H6
C307	*M4	C902	G5	C1309	*K1	C1611	*B2	IC103	*K6	JC1518	E1	Q203	*L5	Q1113	*A4	RV605	H2	R144	*J6	R306	*M5	R422	H6
C308	*M4	C903	F5	C1310	K1	C1612	B2	IC104	J6	JC1521	*E2	Q204	*L5	Q1114	A5	RV701	A4	R145	*K6	R307	*M4	R424	*K2
C309	*M4	C904	F5	C1311	*K1	C1613	*A2	IC201	M6			Q205	*K6	Q1201	*F6	RV801	J3	R146	K6	R308	*M4	R425	*K2
C311	L5	C905	F4	C1312	*K1	C1614	*A2	IC202	M5	L1	M6	Q206	*L5	Q1202	*F6	RV901	A4	R147	K6	R309	*M4	R426	*K2
C312	*L5	C906	*F5	C1313	K1	C1615	B1	IC203	L6	L2	N6	Q207	*K5	Q1203	*B6	RV902	A5	R148	K6	R310	M4	R427	L2
C313	L4	C907	*F5	C1314	*K1	C1616	B4	IC204	L6	L101	*L6	Q209	*K6	Q1204	*B6	RV1001	D4	R149	*J6	R314	*L5	R429	*K2
C314	*M4	C909	*F4	C1315	*J1	C1617	B2	IC205	K6	L102	*L6	Q210	*K6	Q1205	*B6	RV1002	E4	R151	*J6	R315	M5	R430	L2
C315	L4	C910	G5	C1316	J1	C1618	B2	IC206	J6	L201	*M5	Q211	J5	Q1206	*A6	RV1003	A5	R152	J6	R316	*L5	R431	L2
C316	*L5	C911	F4	C1317	*J1	C1619	*A2	IC207	K5	L202	*M5	Q212	*J5	Q1207	B6	RV1004	A5	R153	J6	R317	L5	R433	L2
C317	L4	C912	G5	C1318	*J1	C1620	A3	IC301	M5	L301	M4	Q213	J5	Q1208	B6	RV1101	C5	R201	*M5	R318	*L4	R434	L2
C319	K4	C913	*F4	C1319	*K1	C1701	*J1	IC302	M4	L302	*M5	Q214	*L5	Q1209	A6	RV1102	A6	R202	*M5	R319	*L4	R435	L2
C320	*K5	C914	G4	C1320	J1	C1702	H1	IC303	L5	L401	*J6	Q215	*J5	Q1210	A6	RV1103	A6	R203	*M6	R320	*L5	R436	*L2
C321	K4	C1001	E4	C1321	J1	C1703	*G1	IC304	L5	L402	*J6	Q216	*K5	Q1211	*L3	RV1104	A6	R204	*M6	R321	*M5	R437	L2
C322	*K4	C1002	E4	C1401	B2	C1704	F2	IC305	K5	L403	*L2	Q301	*M4	Q1212	*L3	RV1201	E6	R205	M5	R322	*L4	R438	*L2
C323	*K4	C1003	*D4	C1402	B3	C1705	H1	IC306	J5	L404	*L2	Q302	*L4	Q1301	*L1	RV1202	B6	R206	*M6	R323	*L4	R439	*K2
C324	*J4	C1004	*E4	C1403	*B3	C1706	G1	IC307	K4	L501	*K2	Q303	*L4	Q1302	*L1	RV1203	A6	R207	*M5	R324	*L5	R450	*K2
C325	*J4	C1005	*E4	C1404	*B3	C1707	H1	IC401	*H6	L502	*K2	Q304	*L4	Q1303	*K1	RV1204	L3	R208	*M5	R326	*L5	R501	*J5
C401	*H6	C1006	*D4	C1405	*B3	C1708	G1	IC402	*K2	L601	*J2	Q305	*K5	Q1304	*K1	RV1401	B3	R209	*M5	R327	*L4	R502	*H6
C403	*H6	C1008	C4	C1406	*B3	C1709	H1	IC403	*L2	L602	*J2	Q306	*L5	Q1305	*K1	RV1402	F2	R210	M5	R328	L4	R504	H6
C405	*H6	C1009	C4	C1407	*B3	C1710	H2	IC501	*H6	L701	*G6	Q307	*K4	Q1306	*K1	RV1501	C2	R214	*L6	R329	L4	R505	*H5
C406	H6	C1010	D4	C1408	B3	C1711	G1	IC502	*J2	L702	*G6	Q310	*K5	Q1307	K1	RV1502	D1	R215	M6	R330	*L4	R506	*H6
C407	H6	C1011	*D4	C1409	B4	C1716	*G3	IC503	*J2	L703	*K2	Q311	*K5	Q1308	K1	RV1601	A3	R216	*L5	R331	*L4	R507	*H5
C408	H6	C1012	*D4	C1410	*B4	C1717	G3	IC601	*H5	L704	*K3	Q312	J4	Q1309	*K1	RV1602	A3	R217	*M6	R332	*L5	R508	*H5
C409	*H6	C1013	*C4	C1411	*F1	C1718	*G3	IC602	*H2	L801	*G5	Q313	J4	Q1310	*K1	RV1604	B2	R218	*L5	R333	K5	R509	*H5
C410	*H6	C1101	F5	C1412	*F2	C1719	*G3	IC603	*H2	L802	*G6	Q314	J4	Q1311	*K1	RV1701	H1	R219	*L5	R334	*L5	R511	H5
C411	*H6	C1102	F5	C1413	*F2	C1720	F3	IC701	J3	L803	H3	Q315	*J4	Q1312	J1	RV1702	G2	R220	*L6	R335	*L4	R512	H5
C413	*L2	C1103	E5	C1414	*F2	C1721	*F3	IC801	H3	L804	*J2	Q316	*K5	Q1313	*J1	RV1703	G2	R221	*M5	R336	*L4	R513	*H5
C414	L2	C1104	*E5	C1415	F2	C1722	F3	IC802	*J3	L805	*J3	Q401	*H6	Q1314	K1	RV1704	G3	R222	*L5	R337	L4	R514	*H5
C415	*L2	C1105	*E5	C1416	*F2	C1723	*F3	IC803	H3	L901	G5	Q402	H6	Q1401	*B3			R223	*L5	R338	*L4	R515	H5

R516	H5	R817	G6	R928	*F5	R1217	*B6	R1418	*B4	R1609	B2	R1806	*M1
R517	*H5	R818	*G6	R929	*F5	R1218	*B6	R1419	*B3	R1610	*B2	R1807	*M1
R518	*H5	R819	*G6	R930	G5	R1219	*B6	R1420	*B4	R1611	*B2	R1808	*M1
R519	*J2	R820	G6	R931	G4	R1221	B6	R1421	*C3	R1613	*B2	R1809	*M1
R520	*J2	R821	*F6	R932	G4	R1222	*A6	R1422	*C3	R1614	*B2	R1810	*N1
R522	*J2	R822	*G6	R1001	D4	R1223	*A6	R1425	*C3	R1615	B1	R1811	*N1
R523	J2	R823	G6	R1002	E4	R1224	*B6	R1427	*D3	R1616	*B2	R1812	*N1
R524	J2	R824	*G6	R1003	*E4	R1225	*A6	R1428	*D3	R1617	*B2	R1813	N1
R526	J2	R825	*G6	R1004	*D4	R1226	*B6	R1429	*D3	R1618	B2	R1814	*N1
R527	J2	R826	G6	R1005	*D4	R1227	*B6	R1430	*D3	R1619	*A2	R1816	*N1
R528	J2	R827	*F6	R1006	*D4	R1228	A6	R1431	*D3	R1620	*A2	R1817	N1
R529	*J2	R828	G5	R1007	*A5	R1229	A6	R1432	*D3	R1621	*B2	R1820	*N2
R530	J2	R829	G5	R1008	*D4	R1230	*A6	R1433	*D3	R1622	B2	R1821	*N2
R531	*K2	R830	G6	R1009	C4	R1231	A6	R1434	*D3	R1623	*A2	R1822	*N2
R550	J2	R831	G6	R1010	C4	R1232	A6	R1435	E3	R1624	B2	R1823	*N2
R601	*J5	R832	*F5	R1011	C4	R1233	A6	R1436	E3	R1625	*B3	R1824	*N2
R602	*H5	R833	H3	R1012	C4	R1234	M3	R1437	*E3	R1626	*B3	R1825	*N2
R604	H5	R834	H3	R1013	*D4	R1235	*L3	R1438	*E3	R1627	*B3	R1826	M2
R605	*H5	R835	H3	R1014	*D4	R1237	*M3	R1439	*E3	R1628	*A3	R1835	*M2
R606	*H5	R836	H3	R1015	*D4	R1238	L3	R1441	*E3	R1629	*A4	R1836	*M2
R607	*H5	R837	*G3	R1016	D4	R1239	*M3	R1442	*D3	R1630	*A4	R1837	*M2
R608	*H4	R838	*G3	R1017	C4	R1240	*L3	R1443	E3	R1631	*A4	R1838	*M2
R609	*H4	R839	*H3	R1018	*C4	R1241	*L3	R1444	E3	R1632	B1	R1839	*M2
R611	H4	R841	*H3	R1101	*F5	R1242	*L3	R1445	D3	R1633	B1	R1840	*M2
R612	H4	R844	*H3	R1102	E5	R1243	*M3	R1446	E3	R1701	*H1	R1841	*M2
R613	*H4	R850	H3	R1104	*F5	R1244	*M3	R1447	E3	R1702	*H1	R1842	*M2
R614	*H4	R851	*H3	R1105	*E5	R1245	*K3	R1448	*D3	R1703	*H1	R1843	*M2
R615	H4	R852	*H2	R1106	*E5	R1246	*K3	R1449	*E3	R1705	*H2	R1844	*M2
R616	H4	R853	*H3	R1107	*E5	R1247	*L3	R1450	*E3	R1706	H1	R1845	*M2
R617	*H4	R854	*H3	R1108	*E5	R1248	*L3	R1451	*E3	R1707	G2	R1846	*M2
R618	*H5	R856	*H2	R1109	*E5	R1250	*L3	R1452	*E3	R1709	G1	R1847	*L2
R619	H4	R857	*H3	R1111	*D5	R1251	*L3	R1453	*C3	R1710	G2	R1848	*M1
R620	H4	R858	H3	R1112	*D5	R1252	*L3	R1454	*C3	R1711	*G2	R1849	*L2
R621	H4	R859	*H3	R1113	D5	R1253	*L2	R1457	*C3	R1712	G2		
R622	H4	R864	H2	R1114	D5	R1254	*L3	R1459	*C3	R1713	G2	S401	K2
R623	H4	R865	J3	R1115	*D5	R1255	*L3	R1460	*C3	R1714	*G2	S901	G4
R624	H4	R866	*H3	R1116	*D5	R1256	L3	R1461	*C3	R1716	*G2	S1101	E5
R625	*H2	R867	J3	R1117	*D5	R1257	F6	R1462	*B3	R1717	*G2	S1102	C5
R626	*H2	R868	*J3	R1119	*C5	R1258	F6	R1463	F2	R1718	*G2	S1201	L3
R628	*H2	R869	H2	R1120	*D5	R1259	*M3	R1499	*F2	R1719	G2	S1501	F1
R629	H2	R870	J3	R1121	*C5	R1260	*L3	R1501	*D2	R1720	G2	S1502	E1
R630	H2	R871	J2	R1122	*C5	R1301	*L1	R1502	*C1	R1721	G2	S1503	C2
R632	H2	R872	J3	R1123	*C5	R1302	*L1	R1503	*C3	R1722	G2	S1601	A2
R633	H2	R873	*J3	R1124	C5	R1303	*L1	R1504	*C3	R1724	G3	S1701	H1
R634	H2	R874	*H2	R1125	*C5	R1304	*L1	R1505	*C2	R1725	G3		
R635	*H2	R875	*H2	R1126	*C5	R1305	L1	R1506	*C2	R1726	*G3	THP1	B3
R636	H2	R876	H3	R1127	*C5	R1306	L1	R1507	*C3	R1727	*G3		
R637	*J2	R877	H3	R1128	*B5	R1307	*L1	R1508	*C2	R1728	*G3	TP101	J6
R650	H2	R878	*H3	R1129	*C5	R1308	K1	R1509	C3	R1730	*G3	TP201	K5
R701	G6	R879	J3	R1130	*C5	R1309	*L1	R1510	C3	R1731	*G3	TP202	J5
R702	G6	R880	J3	R1131	*C5	R1310	K1	R1511	*C2	R1732	*G3	TP301	K4
R703	*G6	R881	H3	R1132	*B5	R1311	*K1	R1513	*C1	R1733	*G3	TP302	J4
R704	*G6	R882	H3	R1133	*B5	R1312	*L1	R1514	*C1	R1734	*G3	TP401	H6
R705	G6	R883	H3	R1134	*B5	R1313	*K1	R1515	*C1	R1735	*G3	TP501	H5
R706	G6	R884	H3	R1135	B5	R1314	K1	R1516	*C1	R1736	G3	TP601	H4
R707	*G6	R885	J3	R1136	B5	R1315	K1	R1517	C3	R1737	G3	TP701	F6
R708	*G6	R886	H3	R1137	*B5	R1316	K1	R1518	*C2	R1738	F3	TP801	F6
R709	G6	R887	*H3	R1138	*B5	R1317	*K1	R1519	*C2	R1739	F3	TP1101	B5
R710	G6	R888	*H3	R1139	*B5	R1318	*K1	R1520	*C3	R1740	F3	TP1102	C5
R711	*G6	R890	H3	R1140	*B5	R1319	K1	R1521	C2	R1741	*F3	TP1103	B6
R712	*G6	R891	H3	R1141	B5	R1320	K1	R1522	*D2	R1742	*F3	TP1201	M3
R713	G6	R892	*J3	R1142	*B5	R1321	K1	R1523	*D2	R1743	F3	TP1301	K1
R714	G6	R893	*H3	R1143	A5	R1322	K1	R1524	*D2	R1744	*G3	TP1302	J1
R715	*G6	R894	*H2	R1144	B5	R1323	K1	R1525	*D1	R1745	F3	TP1303	J1
R716	*G6	R895	H2	R1145	*B5	R1324	K1	R1526	D1	R1746	F3	TP1601	A4
R717	G6	R896	*G6	R1146	B5	R1325	*K1	R1527	D2	R1747	F3	TP1602	C3
R718	G6	R897	*G6	R1147	*A5	R1326	*K1	R1528	*E2	R1748	F3	TP1701	G3
R719	G6	R900	H3	R1148	A5	R1327	*J1	R1529	D1	R1749	F3	TP1702	F3
R720	G6	R902	*G4	R1149	*A5	R1328	*J1	R1530	*E1	R1750	F3	TP1703	E3
R721	*F6	R903	G5	R1150	*A5	R1329	*J1	R1531	*F1	R1751	*F3	TP1801	M1
R723	J3	R904	*G4	R1151	*A6	R1330	J1	R1532	*F1	R1752	*F3		
R724	*J3	R905	*G5	R1152	*A6	R1331	*J1	R1533	*F1	R1753	*F3	*: B SIDE	
R726	J2	R906	*G5	R1153	B4	R1332	J1	R1534	*E2	R1755	F3		
R727	*J3	R907	*G5	R1154	A4	R1333	J1	R1535	*E1	R1756	F3		
R728	*K2	R908	*G5	R1155	B4	R1335	*J1	R1536	*E1	R1757	F3		
R729	*J2	R909	*G5	R1156	A4	R1336	K1	R1537	*E1	R1758	*F3		
R730	*K3	R910	*G5	R1157	A4	R1337	*K1	R1538	*E1	R1759	*F3		
R731	*K3	R911	G5	R1158	*A5	R1339	J1	R1539	*E1	R1760	F3		
R732	*G6	R912	*G4	R1159	A4	R1401	*B3	R1540	*E1	R1761	*F3		
R733	*G6	R914	*F5	R1201	F6	R1402	*B3	R1541	*E1	R1762	F2		
R804	*G5	R915	*F5	R1202	F6	R1403	*B3	R1542	*D1	R1763	F3		
R805	G5	R916	F4	R1203	*F6	R1404	*B3	R1544	*E1	R1764	E3		
R806	*G5	R917	F5	R1204	*F6	R1405	*B3	R1545	C1	R1765	F3		
R807	*G5	R918	*A4	R1205	*E6	R1406	B3	R1546	*C1	R1766	E3		
R808	G5	R919	*F5	R1207	*E6	R1409	*F2	R1547	*C1	R1767	E3		
R809	*G5	R920	*F5	R1208	*E6	R1410	*F2	R1548	*C1	R1768	*E3		
R810	*G6	R921	*F5	R1209	*E6	R1411	*F2	R1601	*A3	R1769	E3		
R811	G6	R922	*F4	R1210	*E6	R1412	*F2	R1603	*A3	R1770	*E3		
R812	*G6	R923	*F4	R1211	*E6	R1413	*F2	R1604	*A3	R1801	*M1		
R813	*G6	R924	F4	R1213	*E6	R1414	F2	R1605	A2	R1802	*M1		
R814	G6	R925	F4	R1214	*B6	R1415	*F2	R1606	A2	R1803	*M1		
R815	*G6	R926	F4	R1215	*B6	R1416	*E2	R1607	*A2	R1804	*M1		
R816	*G6	R927	G5	R1216	*B6	R1417	*E2	R1608	*A2	R1805	*M1		

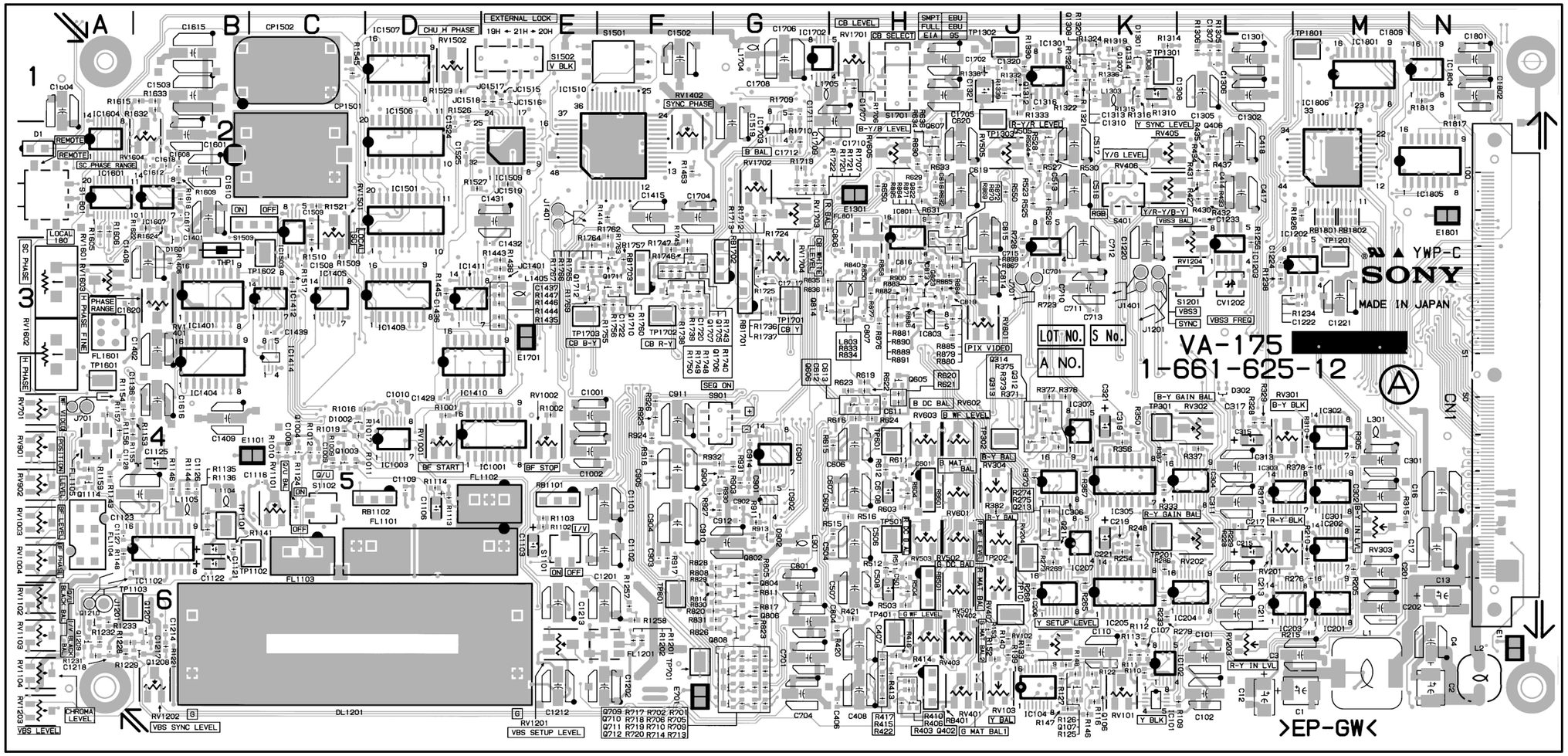

VA-175 -A SIDE-
1-661-625-12

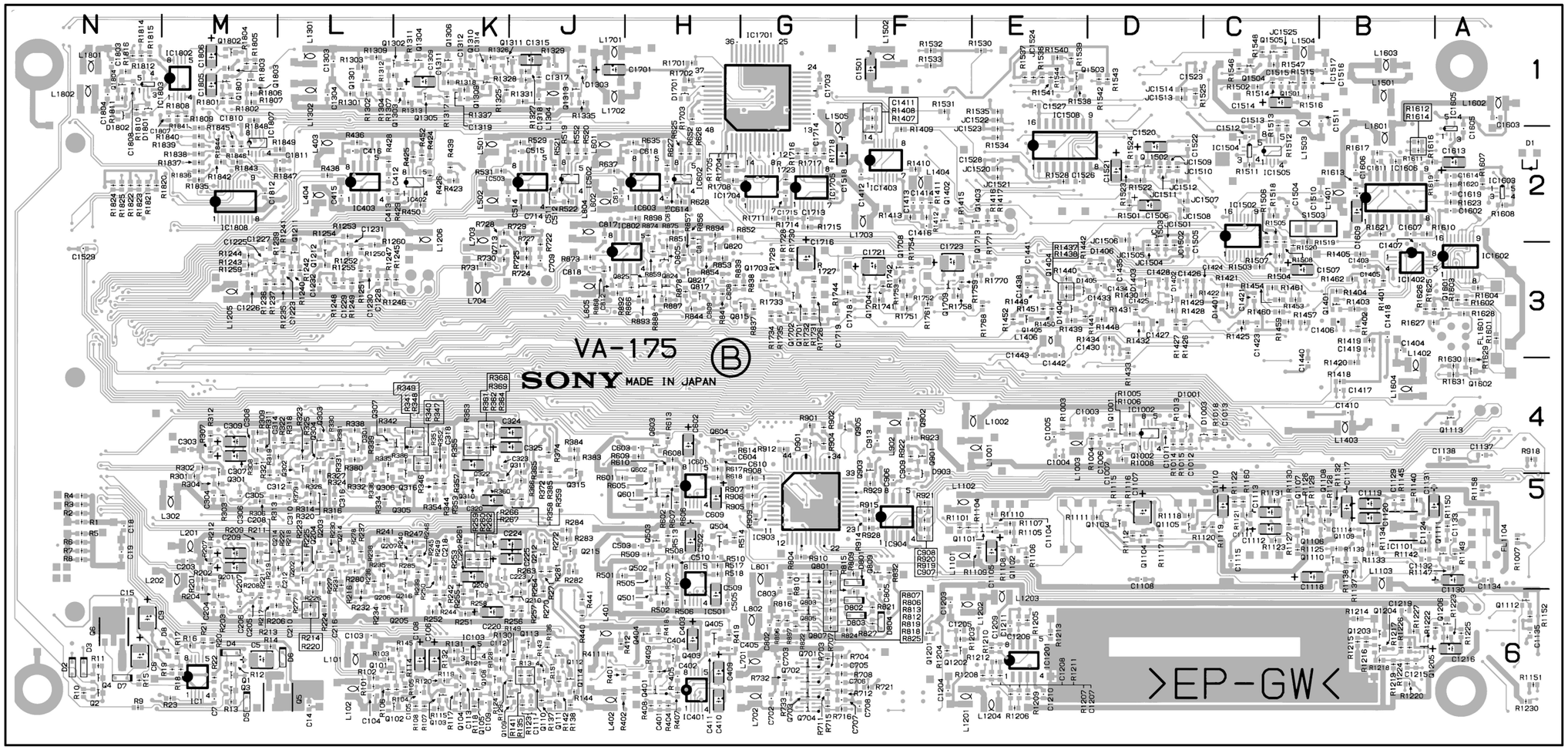

VA-175 -B SIDE-
1-661-625-12

VA-175A (1-661-625-11)

CN1	N4	C416	*L2	C1107	*D5	C1424	*D3	C1808	*N1	IC1102	B5	L1201	*F6	Q604	*H4	Q1702	*G3	R13	*M6	R236	*L5	R355	*K4
		C417	L2	C1108	*D5	C1425	*D3	C1809	M1	IC1201	*E6	L1202	*F6	Q605	H4	Q1703	*G3	R14	*M6	R237	*L5	R356	K4
CP1501	C2	C418	L2	C1109	D5	C1426	*D3	C1810	*M1	IC1202	M3	L1203	*E6	Q606	H4	Q1704	*F3	R15	*N6	R238	*L5	R357	*K5
CP1502	C1	C502	*H5	C1110	*C5	C1427	*D3	C1812	*M2	IC1203	L3	L1204	*E6	Q607	H2	Q1705	F3	R16	*M6	R239	*K5	R358	*J5
		C504	H5	C1111	*C5	C1428	*D3			IC1301	J1	L1205	*M3	Q701	*G6	Q1706	F3	R17	*M6	R240	*K5	R359	*J5
CV1202	L3	C505	*H6	C1112	*C5	C1429	D4	DL1201	C6	IC1401	B3	L1206	*K2	Q702	*G6	Q1707	F3	R18	*M6	R241	*L5	R360	*K5
		C506	H5	C1113	*C5	C1430	*D3			IC1402	*B3	L1301	*L1	Q703	*G6	Q1708	*F3	R19	*M6	R242	*K6	R361	*K4
C1	M6	C507	H6	C1115	*C5	C1431	E2	D1	A2	IC1403	*F2	L1302	*L1	Q704	*G6	Q1709	*F3	R20	*M6	R244	*K6	R362	*K4
C2	N6	C508	H6	C1116	C5	C1432	E3	D2	*N6	IC1404	B4	L1303	K1	Q709	G6	Q1710	F3	R21	*M6	R245	*K5	R363	*K4
C3	M6	C509	*H6	C1117	*B5	C1433	*D3	D3	*N6	IC1405	C3	L1304	*J1	Q710	G6	Q1711	F3	R22	*M6	R246	*K5	R364	*K4
C4	N6	C510	*H5	C1118	*C5	C1434	*D3	D4	*M6	IC1409	D3	L1401	*B2	Q711	G6	Q1712	E3	R23	*M6	R247	*K5	R365	*J4
C5	*M6	C512	*J2	C1119	*B5	C1435	*D3	D5	*M6	IC1410	D4	L1402	*B4	Q712	G6	Q1713	*E3	R101	*L6	R248	K5	R366	*J5
C6	*N6	C513	J2	C1120	*B5	C1436	D3	D6	*L6	IC1411	D3	L1403	*B4	Q713	*K3	Q1801	*M1	R102	*L6	R250	*K5	R367	K5
C7	*M6	C514	*K2	C1121	B5	C1437	E3	D7	*N6	IC1412	C3	L1404	*F2	Q801	*G5	Q1802	*M1	R103	*L6	R251	*K6	R368	*K4
C9	*N6	C515	*J2	C1122	B5	C1438	*E3	D8	*M6	IC1414	C4	L1405	E3	Q802	G5	Q1803	*M1	R104	*K6	R252	*K6	R370	J5
C12	L6	C516	K2	C1123	B5	C1439	C3	D301	*L4	IC1501	D3	L1501	*B1	Q803	*G6	Q1804	*N1	R105	*K6	R253	*K5	R371	J4
C13	N6	C517	K2	C1124	*B5	C1440	*C4	D302	L4	IC1502	*C3	L1502	*F1	Q804	G6			R107	*K6	R254	K5	R372	*J4
C14	*L6	C602	*H4	C1126	B5	C1441	*E3	D801	*G5	IC1503	C3	L1503	*C1	Q805	*G6	RB401	H6	R108	*K6	R255	*K6	R373	J4
C15	*N6	C604	*H4	C1127	A5	C1501	*F1	D802	*G6	IC1504	*C2	L1504	*C1	Q806	G6	RB501	H6	R109	L6	R256	*J6	R374	*J4
C16	N5	C605	H5	C1128	A4	C1502	F1	D803	*G6	IC1505	*C2	L1505	*G2	Q807	*G6	RB601	H5	R110	K6	R257	*J6	R375	J4
C17	N5	C606	H4	C1129	*B5	C1503	B1	D804	*F6	IC1506	D2	L1601	*B2	Q808	G6	RB1101	E5	R111	K6	R258	*K6	R376	K4
C18	*N5	C607	H5	C1130	*A5	C1504	*C2	D805	*H3	IC1507	D1	L1602	*A1	Q809	*F5	RB1102	D5	R112	K6	R259	*K5	R377	J4
C19	*N5	C608	H5	C1131	*B5	C1505	*D3	D901	*G4	IC1508	*E2	L1603	*B1	Q814	G3	RB1701	G3	R113	K6	R260	*K5	R378	M4
C101	L6	C609	*H5	C1132	*B5	C1506	*D2	D902	G5	IC1509	E2	L1604	*B4	Q815	*H3	RB1702	G3	R115	*K6	R261	*K5	R379	*L5
C102	L6	C610	*H4	C1133	*A5	C1507	*C3	D903	*F4	IC1510	F2	L1701	*J1	Q817	*H3	RB1703	F3	R116	K6	R262	*K5	R380	*L4
C103	*L6	C611	H4	C1134	*A5	C1508	C3	D1001	*D4	IC1601	A2	L1702	*J1	Q820	*H3	RB1801	M2	R117	*K6	R263	*J5	R381	*L4
C104	*L6	C612	H4	C1135	*A6	C1509	C2	D1003	*D4	IC1602	*A3	L1703	*F2	Q821	*H3	RB1802	M2	R118	*K6	R264	*J6	R382	J5
C105	*K6	C613	H4	C1136	B4	C1510	*B2	D1301	K1	IC1603	*A2	L1704	G1	Q822	J2			R119	*K6	R265	K5	R383	*J4
C106	*K6	C615	*H2	C1137	*A4	C1511	*B1	D1303	*J1	IC1604	A2	L1705	G1	Q823	H3	RV101	K6	R120	*K6	R266	*K5	R384	*J4
C107	K6	C616	H2	C1138	*A4	C1512	*C2	D1401	*C3	IC1605	*A2	L1801	*N1	Q824	*H3	RV102	J6	R121	*K6	R268	J6	R385	*J4
C108	*K6	C617	*J2	C1201	F6	C1513	*C1	D1402	*D3	IC1606	*B2	L1802	*N1	Q825	*H3	RV103	J6	R122	K6	R269	J5	R401	*J6
C110	K6	C618	*H2	C1202	F6	C1514	*C1	D1403	*D3	IC1607	B2			Q901	*F4	RV201	L5	R123	*J6	R270	*J5	R402	*J6
C111	*J6	C619	J2	C1203	*F6	C1515	*C1	D1404	*E3	IC1701	*G1	Q1	*M6	Q902	*F4	RV202	L5	R124	*K6	R271	J5	R403	H6
C112	*K6	C620	J2	C1204	*F6	C1516	*C1	D1405	*E3	IC1702	G1	Q2	*N6	Q903	*F4	RV203	L6	R125	K6	R272	*J5	R404	*H6
C113	*K6	C701	G6	C1209	*E6	C1517	*B1	D1406	*D3	IC1703	G2	Q3	*M6	Q904	G5	RV204	J5	R126	K6	R273	J5	R405	*H6
C201	M5	C702	*G6	C1210	*E6	C1518	*G2	D1801	*N1	IC1704	*G2	Q4	*N6	Q905	*G4	RV301	L4	R127	K6	R274	J5	R406	H6
C202	M6	C703	*G6	C1211	*E6	C1519	G1	D1802	*N1	IC1705	*G2	Q5	*L6	Q1001	*D4	RV302	L4	R128	*K6	R275	J5	R408	*H6
C203	*M5	C704	G6	C1212	E6	C1520	*D2			IC1801	M1	Q6	*N6	Q1002	*D4	RV303	M5	R129	*J6	R276	M5	R409	*H6
C204	*M6	C705	*G6	C1213	E6	C1521	*D2	E1	N6	IC1802	*M1	Q101	*L6	Q1003	C4	RV304	J4	R130	*K6	R277	*L6	R410	H6
C205	*M6	C706	*G6	C1214	B6	C1522	*D2	E701	F6	IC1803	*N1	Q102	*K6	Q1004	C4	RV401	J6	R131	*K6	R278	*L5	R411	*J6
C206	*M6	C707	*G6	C1215	*B6	C1523	*D1	E1101	C4	IC1804	N1	Q103	*K6	Q1101	*E5	RV402	J6	R132	*K6	R279	K6	R412	*J6
C207	*M5	C708	*F6	C1216	*A6	C1524	D2	E1301	H2	IC1805	M2	Q104	*K6	Q1102	*E5	RV403	H6	R133	J6	R280	*L5	R413	H6
C208	*M5	C710	J3	C1217	B6	C1525	D2	E1701	E3	IC1806	M2	Q105	*K6	Q1103	*D5	RV405	K2	R134	*J6	R281	*J5	R414	H6
C209	*M5	C711	K3	C1218	A6	C1526	*E2	E1801	N2	IC1807	*M2	Q106	K6	Q1104	*D5	RV406	K2	R135	*J6	R282	J5	R416	H6
C211	L6	C712	K3	C1219	*B6	C1527	*E1			IC1808	*M2	Q107	K6	Q1105	*D5	RV407	J6	R136	*J6	R283	*J5	R417	H6
C212	*L5	C713	K3	C1220	K3	C1528	*E2	FL801	H2	IS1503	C2	Q108	*K6	Q1106	*C5	RV501	J6	R137	*J6	R284	*J5	R418	*H6
C213	L5	C714	*J2	C1221	M3	C1529	*N3	FL1101	D5			Q109	*J6	Q1107	*C5	RV502	J5	R138	*J6	R301	*M5	R419	*H6
C214	*M5	C715	J3	C1223	*L3	C1601	B2	FL1103	C5	JC501	*D3	Q110	*J6	Q1108	*B5	RV503	H5	R139	J6	R302	*M4	R420	H6
C215	L5	C801	G5	C1224	L3	C1602	*A2	FL1104	A5	JC1401	E3	Q111	*J6	Q1109	*B5	RV505	J2	R140	J6	R303	*M5	R421	H6
C216	*L6	C802	*G6	C1226	*M3	C1603	*A1	FL1105	A4	JC1503	*D3	Q112	*J6	Q1110	*B5	RV601	J5	R141	*J6	R304	*M5	R422	H6
C217	L5	C803	*G5	C1227	*M3	C1604	A1	FL1201	F6	JC1505	*D3	Q113	*J6	Q1111	*A5	RV602	J4	R142	*J6	R305	M4	R424	*K2
C219	K5	C804	G6	C1230	*L3	C1605	*A2	FL1601	A3	JC1509	*D2	Q114	*J6	Q1112	*A6	RV603	H4	R143	*J6	R306	*M5	R426	*K2
C220	*K6	C806	H3	C1232	*L3	C1606	*B2			JC1511	*D2	Q201	*M5	Q1113	*A4	RV605	H2	R144	*J6	R307	*M4	R427	L2
C221	K5	C807	H3	C1233	L2	C1607	*B2	IC1	*M6	JC1513	*D1	Q202	*L5	Q1114	A5	RV701	A4	R145	*K6	R308	*M4	R429	*K2
C222	*K5	C808	*H3	C1301	L1	C1608	B2	IC101	K6	JC1516	E1	Q203	*L5	Q1201	*F6	RV801	J3	R146	K6	R309	*M4	R430	L2
C223	*K5	C809	*H3	C1302	L1	C1609	*B2	IC102	K6	JC1518	E1	Q204	*L5	Q1202	*F6	RV901	A4	R147	K6	R310	M4	R431	L2
C224	*J5	C812	*J3	C1303	*L1	C1610	B2	IC103	*K6	JC1521	*E2	Q205	*K6	Q1203	*B6	RV902	A5	R148	K6	R314	*L5	R433	L2
C225	*J5	C814	J3	C1304	*L1	C1611	*B2	IC104	J6			Q206	*L5	Q1204	*B6	RV1001	D4	R149	*J6	R315	M5	R434	L2
C301	M4	C815	J2	C1305	L1	C1612	B2	IC201	M6	L1	M6	Q207	*K5	Q1205	*B6	RV1002	E4	R150	*J6	R316	*L5	R435	L2
C302	M5	C816	H3	C1306	L1	C1613	*A2	IC202	M5	L2	N6	Q209	*K6	Q1206	*A6	RV1003	A5	R151	*J6	R317	L5	R436	*L2
C303	*M4	C817	*J2	C1307	L1	C1614	*A2	IC203	L6	L101	*L6	Q210	*K6	Q1207	B6	RV1004	A5	R152	J6	R318	*L4	R437	L2
C304	*M5	C818	*J3	C1308	K1	C1615	B1	IC204	L6	L102	*L6	Q211	J5	Q1208	B6	RV1101	C5	R153	J6	R319	*L4	R438	*L2
C305	*M5	C901	G5	C1309	*K1	C1616	B4	IC205	K6	L201	*M5	Q212	J5	Q1209	A6	RV1102	A6	R201	*M5	R320	*L5	R439	*K2
C306	*M5	C902	G5	C1310	K1	C1617	B2	IC206	J6	L202	*M5	Q213	J5	Q1210	A6	RV1103	A6	R202	*M5	R321	*M5	R440	*J6
C307	*M4	C903	F5	C1311	*K1	C1618	B2	IC207	K5	L301	M4	Q214	*L5	Q1211	*L3	RV1104	A6	R203	*M6	R322	*L4	R450	*K2
C308	*M4	C904	F5	C1312	*K1	C1619	*A2	IC301	M5	L302	*M5	Q215	*J5	Q1212	*L3	RV1201	E6	R204	*M6	R323	*L4	R501	*J5
C309	*M4	C905	F4	C1313	K1	C1620	A3	IC302	M4	L401	*J6	Q301	*M4	Q1301	*L1	RV1202	B6	R205	M5	R324	*L5	R502	*H6
C311	L5	C906	*F5	C1314	*K1	C1701	*J1	IC303	L5	L402	*J6	Q302	*L4	Q1302	*L1	RV1203	A6	R206	*M6	R326	*L5	R504	H6
C312	*L5	C907	*F5	C1315	*J1	C1702	H1	IC304	L5	L403	*L2	Q303	*L4	Q1303	*K1	RV1204	L3	R207	*M5	R327	*L4	R505	*H5
C313	L4	C909	*F4	C1316	J1	C1703	*G1	IC305	K5	L404	*L2	Q304	*L4	Q1304	*K1	RV1401	B3	R208	*M5	R328	L4	R506	*H6
C314	*M4	C910	G5	C1317	*J1	C1704	F2	IC306	J5	L501	*K2	Q305	*K5	Q1305	*K1	RV1402	F2	R209	*M5	R329	L4	R507	*H5
C315	L4	C911	F4	C1318	*J1	C1705	H1	IC307	K4	L502	*K2	Q306	*L5	Q1306	*K1	RV1501	C2	R210	M5	R330	*L4	R508	*H5
C316	*L5	C912	G5	C1319	*K1	C1706	G1	IC401	*H6	L601	*J2	Q307	*K4	Q1307	K1	RV1502	D1	R214	*L6	R331	*L4	R509	*H5
C317	L4	C913	*F4	C1401	B2	C1707	H1	IC402	*K2	L602	*J2	Q310	*K5	Q1308	K1	RV1601	A3	R215	M6	R332	*L5	R511	H5
C319	K4	C914	G4	C1402	B3	C1708	G1	IC403	*L2	L701	*G6	Q311	*K5	Q1309	*K1	RV1602	A3	R216	*L5	R333	K5	R512	H5
C320	*K5	C1001	E4	C1403	*B3	C1709	H1	IC501	*H6	L702	*G6	Q312	J4	Q1310	*K1	RV1604	B2	R217	*M6	R334	*L5	R513	*H5
C321	K4	C1002	E4	C1404	*B3	C1710	H2	IC502	*J2	L703	*K2	Q313	J4	Q1311	*K1	RV1701	H1	R218	*L5	R335	*L4	R514	*H5
C322	*K4	C1003	*D4	C1405	*B3	C1711	G1	IC503	*J2	L704	*K3	Q314	J4	Q1312	J1	RV1702	G2	R219	*L5	R336	*L5	R515	H5
C323	*K4	C1004	*E4	C1406	*B3	C1716	*G3	IC601	*H5	L801	*G5	Q315	*J4	Q1313	*J1	RV1703	G2	R220	*L6	R337	L4	R516	H5
C324	*J4	C1005	*E4	C1407	*B3	C1717	G3	IC602	*H2	L802	*G6	Q401	*H6	Q1314	K1	RV1704	G3	R221	*M5	R338	*L4	R517	*H5
C325	*J4	C1006	*D4	C1408	B3	C1718	*G3	IC603	*H2	L803	H3	Q402	H6	Q1401	*B3			R222	*L5	R339	*L4	R518	*H5
C401	*H6	C1008	C4	C1409	B4	C1719	*G3	IC701	J3	L804	*J2	Q403	*H6	Q1402	*F2	R1	*N5	R223	*L5	R340	*K4	R520	*J2
C403	*H6	C1009	C4	C1410	*B4	C1720	F3	IC801	H3	L805	*J3	Q404	*H6	Q1403	*E2	R2	*N5	R224	*L6	R341	*K4	R522	*J2
C405	*H6	C1010	D4	C1411	*F1	C1721	*F3	IC802	*J3	L901	G5	Q405	*H6	Q1404	*E3	R3	*N5	R226	*L6	R342	*L4	R523	J2
C406	H6	C1011	*D4	C1413	*F2	C1722	F3	IC803	H3	L902	*F4	Q406	L2	Q1405	*E3	R4	*N5	R227	*L5	R344	*K5	R524	J2
C407	H6	C1012	*D4	C1414	*F2	C1723	*F3	IC901	G5	L1001	*E4	Q501	*H6	Q1501	*C1	R5	*N5	R228	L5	R346	*K5	R526	J2
C408	H6	C1013	*C4	C1415	F2	C1801	N1	IC902	G5	L1002	*E4	Q502	*H5	Q1502	*D2	R6	*N5	R229	L5	R347	*K4	R527	J2
C409	*H6	C1101	F5	C1416	*F2	C1802	N1	IC903	*G5	L1003	*E4	Q503	*H5	Q1503	*E1	R7	*N5	R230	*L5	R348	*K4	R528	J2
C410	*H6	C1102	F5	C1417	*B4	C1803	*N1	IC904	*F5	L1101	*F5	Q504	*H5	Q1504	*C1	R8	*N5	R231	*L5	R349	*K4	R529	*J2
C411	*H6	C1103	E5	C1418	*B3	C1804	*N1	IC1001	D4	L1102	*F5	Q505	J2	Q1505	*C1	R9	*N6	R232	*L6	R350	K4	R530	J2
C413	*L2	C1104	*E5	C1419	*B3	C1805	*M1	IC1002	*D4	L1103	*B5	Q601	*H5	Q1601	*A3	R10	*N6	R233	K6	R352	*K4	R531	*K2
C414	L2	C1105	*E5	C1421	*C3	C1806	*M1	IC1003	D4	L1104	B5	Q602	*H4	Q1602	*A4	R11	*N6	R234	*L6	R353	*K5	R550	J2
C415	*L2	C1106	D5	C1423	*C3	C1807	*M1	IC1101	*B5	L1105	B5	Q603	*H4	Q1701	*G3	R12	*M6	R235	*L5	R354	*K5	R601	*J5

http://getMANUAL.com

R602	*H5	R833	H3	R1012	C4	R1233	A6	R1436	E3	R1626	*B3	R1825	*N2
R604	H5	R834	H3	R1013	*D4	R1234	M3	R1437	*E3	R1627	*B3	R1826	M2
R605	*H5	R835	H3	R1014	*D4	R1235	*L3	R1438	*E3	R1628	*A3	R1835	*M2
R606	*H5	R836	H3	R1015	*D4	R1237	*M3	R1439	*E3	R1629	*A4	R1836	*M2
R607	*H5	R837	*G3	R1016	D4	R1238	L3	R1441	*E3	R1630	*A4	R1837	*M2
R608	*H4	R838	*G3	R1017	C4	R1239	*M3	R1442	*D3	R1631	*A4	R1838	*M2
R609	*H4	R839	*H3	R1018	*C4	R1240	*L3	R1443	E3	R1632	B1	R1839	*M2
R611	H4	R841	*H3	R1101	*F5	R1241	*L3	R1444	E3	R1633	B1	R1840	*M2
R612	H4	R844	*H3	R1102	E5	R1242	*L3	R1445	D3	R1701	*H1	R1841	*M2
R613	*H4	R850	H3	R1104	*F5	R1243	*M3	R1446	E3	R1702	*H1	R1842	*M2
R614	*H4	R851	*H3	R1105	*E5	R1244	*M3	R1447	E3	R1703	*H1	R1843	*M2
R615	H4	R852	*H2	R1106	*E5	R1245	*K3	R1448	*D3	R1705	*H2	R1844	*M2
R616	H4	R853	*H3	R1107	*E5	R1246	*K3	R1449	*E3	R1706	H1	R1845	*M2
R617	*H4	R854	*H3	R1108	*E5	R1247	*L3	R1450	*E3	R1707	G2	R1846	*M2
R618	*H5	R856	*H2	R1109	*E5	R1248	*L3	R1451	*E3	R1709	G1	R1847	*L2
R619	H4	R857	*H3	R1111	*D5	R1250	*L3	R1452	*E3	R1710	G2	R1848	*M1
R620	H4	R858	H3	R1112	*D5	R1251	*L3	R1453	*C3	R1711	*G2	R1849	*L2
R621	H4	R859	*H3	R1113	D5	R1252	*L3	R1454	*C3	R1712	G2		
R622	H4	R864	H2	R1114	D5	R1253	*L2	R1457	*C3	R1713	G2	S401	K2
R623	H4	R865	J3	R1115	*D5	R1254	*L3	R1459	*C3	R1714	*G2	S901	G4
R624	H4	R866	*H3	R1116	*D5	R1255	*L3	R1460	*C3	R1716	*G2	S1101	E5
R626	*H2	R867	J3	R1117	*D5	R1256	L3	R1461	*C3	R1717	*G2	S1102	C5
R628	*H2	R868	*J3	R1119	*C5	R1257	F6	R1462	*B3	R1718	*G2	S1201	L3
R629	H2	R869	H2	R1120	*D5	R1258	F6	R1463	F2	R1719	G2	S1501	F1
R630	H2	R870	J3	R1121	*C5	R1259	*M3	R1501	*D2	R1720	G2	S1502	E1
R632	H2	R871	J2	R1122	*C5	R1260	*L3	R1502	*C1	R1721	G2	S1503	C2
R633	H2	R872	J3	R1123	*C5	R1301	*L1	R1503	*C3	R1722	G2	S1601	A2
R634	H2	R873	*J3	R1124	C5	R1302	*L1	R1504	*C3	R1724	G3	S1701	H1
R635	*H2	R874	*H2	R1125	*C5	R1303	*L1	R1505	*C2	R1725	G3		
R636	H2	R875	*H2	R1126	*C5	R1304	*L1	R1506	*C2	R1726	*G3	THP1	B3
R637	*J2	R876	H3	R1127	*C5	R1305	L1	R1507	*C3	R1727	*G3		
R650	H2	R877	H3	R1128	*B5	R1306	L1	R1508	*C2	R1728	*G3	TP401	H6
R701	G6	R878	*H3	R1129	*C5	R1307	*L1	R1509	C3	R1730	*G3	TP501	H5
R702	G6	R879	J3	R1130	*C5	R1308	K1	R1510	C3	R1731	*G3	TP601	H4
R703	*G6	R880	J3	R1131	*C5	R1309	*L1	R1511	*C2	R1732	*G3	TP701	F6
R704	*G6	R881	H3	R1132	*B5	R1310	K1	R1513	*C1	R1733	*G3	TP801	F6
R705	G6	R882	H3	R1133	*B5	R1311	*K1	R1514	*C1	R1734	*G3	TP1101	B5
R706	G6	R883	H3	R1134	*B5	R1312	*L1	R1515	*C1	R1735	*G3	TP1102	C5
R707	*G6	R884	H3	R1135	B5	R1313	*K1	R1516	*C1	R1736	G3	TP1103	B6
R708	*G6	R885	J3	R1136	B5	R1314	K1	R1517	C3	R1737	G3	TP1201	M3
R709	G6	R886	H3	R1137	*B5	R1315	K1	R1518	*C2	R1738	F3	TP1301	K1
R710	G6	R887	*H3	R1138	*B5	R1316	K1	R1519	*C2	R1739	F3	TP1302	J1
R711	*G6	R888	*H3	R1139	*B5	R1317	*K1	R1520	*C3	R1740	F3	TP1303	J1
R712	*G6	R890	H3	R1140	*B5	R1318	*K1	R1521	C2	R1741	*F3	TP1601	A4
R713	G6	R891	H3	R1141	B5	R1319	K1	R1522	*D2	R1742	*F3	TP1602	C3
R714	G6	R892	*J3	R1142	*B5	R1320	K1	R1523	*D2	R1743	F3	TP1701	G3
R715	*G6	R893	*H3	R1143	A5	R1321	K1	R1524	*D2	R1744	*G3	TP1702	F3
R716	*G6	R894	*H2	R1144	B5	R1322	K1	R1525	*D1	R1745	F3	TP1703	E3
R717	G6	R895	H2	R1145	*B5	R1323	K1	R1526	D1	R1746	F3	TP1801	M1
R718	G6	R896	*G6	R1146	B5	R1324	K1	R1527	D2	R1747	F3		
R719	G6	R897	*G6	R1147	*A5	R1325	*K1	R1528	*E2	R1748	F3	* : B SIDE	
R720	G6	R899	J3	R1148	A5	R1326	*K1	R1529	D1	R1749	F3		
R721	*F6	R902	*G4	R1149	*A5	R1327	*J1	R1530	*E1	R1750	F3		
R723	J3	R903	G5	R1150	*A5	R1328	*J1	R1531	*F1	R1751	*F3		
R724	*J3	R904	*G4	R1151	*A6	R1329	*J1	R1532	*F1	R1752	*F3		
R725	*J3	R905	*G5	R1152	*A6	R1330	J1	R1533	*F1	R1753	*F3		
R726	J2	R906	*G5	R1153	B4	R1331	*J1	R1534	*E2	R1755	F3		
R727	*J3	R907	*G5	R1154	A4	R1332	J1	R1535	*E1	R1756	F3		
R728	*K2	R908	*G5	R1155	B4	R1333	J1	R1536	*E1	R1757	F3		
R729	*J2	R909	*G5	R1156	A4	R1334	J1	R1537	*E1	R1758	*F3		
R730	*K3	R910	*G5	R1157	A4	R1335	*J1	R1538	*E1	R1759	*F3		
R731	*K3	R911	G5	R1158	*A5	R1336	K1	R1539	*E1	R1760	F3		
R732	*G6	R912	*G4	R1159	A4	R1337	*K1	R1540	*E1	R1761	*F3		
R733	*G6	R914	*F5	R1160	*C5	R1401	*B3	R1541	*E1	R1762	F2		
R804	*G5	R915	*F5	R1201	F6	R1402	*B3	R1542	*D1	R1763	F3		
R805	G5	R916	F4	R1202	F6	R1403	*B3	R1544	*E1	R1764	E3		
R806	*G5	R917	F5	R1203	*F6	R1404	*B3	R1545	C1	R1765	F3		
R807	*G5	R918	*A4	R1204	*F6	R1405	*B3	R1546	*C1	R1766	E3		
R808	G5	R919	*F5	R1205	*E6	R1406	B3	R1547	*C1	R1767	E3		
R809	*G5	R920	*F5	R1207	*E6	R1409	*F2	R1548	*C1	R1768	*E3		
R810	*G6	R921	*F5	R1208	*E6	R1410	*F2	R1601	*A3	R1769	E3		
R811	G6	R922	*F4	R1209	*E6	R1411	*F2	R1603	*A3	R1770	*E3		
R812	*G6	R923	*F4	R1210	*E6	R1412	*F2	R1604	*A3	R1801	*M1		
R813	*G6	R924	F4	R1211	*E6	R1413	*F2	R1605	A2	R1802	*M1		
R814	G6	R925	F4	R1213	*E6	R1414	F2	R1606	A2	R1803	*M1		
R815	*G6	R926	F4	R1214	*B6	R1415	*F2	R1607	*A2	R1804	*M1		
R816	*G6	R927	G5	R1215	*B6	R1416	*E2	R1608	*A2	R1805	*M1		
R817	G6	R928	*F5	R1216	*B6	R1417	*E2	R1609	B2	R1806	*M1		
R818	*G6	R929	*F5	R1217	*B6	R1418	*B4	R1610	*B2	R1807	*M1		
R819	*G6	R930	G5	R1218	*B6	R1419	*B3	R1611	*B2	R1808	*M1		
R820	G6	R931	G4	R1219	*B6	R1420	*B4	R1613	*B2	R1809	*M1		
R821	*F6	R932	G4	R1221	B6	R1421	*C3	R1614	*B2	R1810	*N1		
R822	*G6	R1001	D4	R1222	*A6	R1422	*C3	R1615	B1	R1811	*N1		
R823	G6	R1002	E4	R1223	*A6	R1425	*C3	R1616	*B2	R1812	*N1		
R824	*G6	R1003	*E4	R1224	*B6	R1427	*D3	R1617	*B2	R1813	N1		
R825	*G6	R1004	*D4	R1225	*A6	R1428	*D3	R1618	B2	R1814	*N1		
R826	G6	R1005	*D4	R1226	*B6	R1429	*D3	R1619	*A2	R1816	*N1		
R827	*F6	R1006	*D4	R1227	*B6	R1430	*D3	R1620	*A2	R1817	N1		
R828	G5	R1007	*A5	R1228	A6	R1431	*D3	R1621	*B2	R1820	*N2		
R829	G5	R1008	*D4	R1229	A6	R1432	*D3	R1622	B2	R1821	*N2		
R830	G6	R1009	C4	R1230	*A6	R1433	*D3	R1623	*A2	R1822	*N2		
R831	G6	R1010	C4	R1231	A6	R1434	*D3	R1624	B2	R1823	*N2		
R832	*F5	R1011	C4	R1232	A6	R1435	E3	R1625	*B3	R1824	*N2		

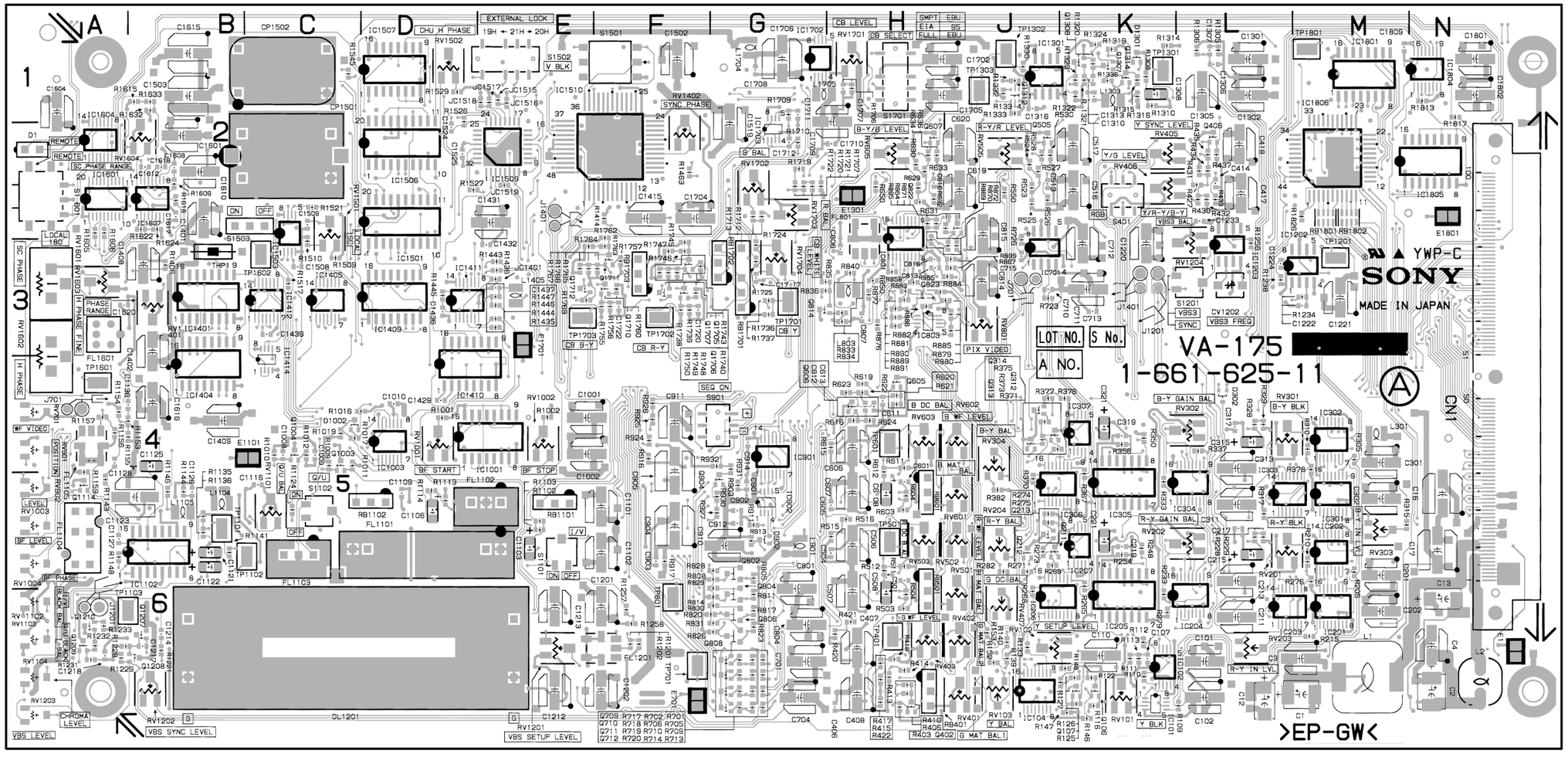

VA-175 -A SIDE-
1-661-625-11

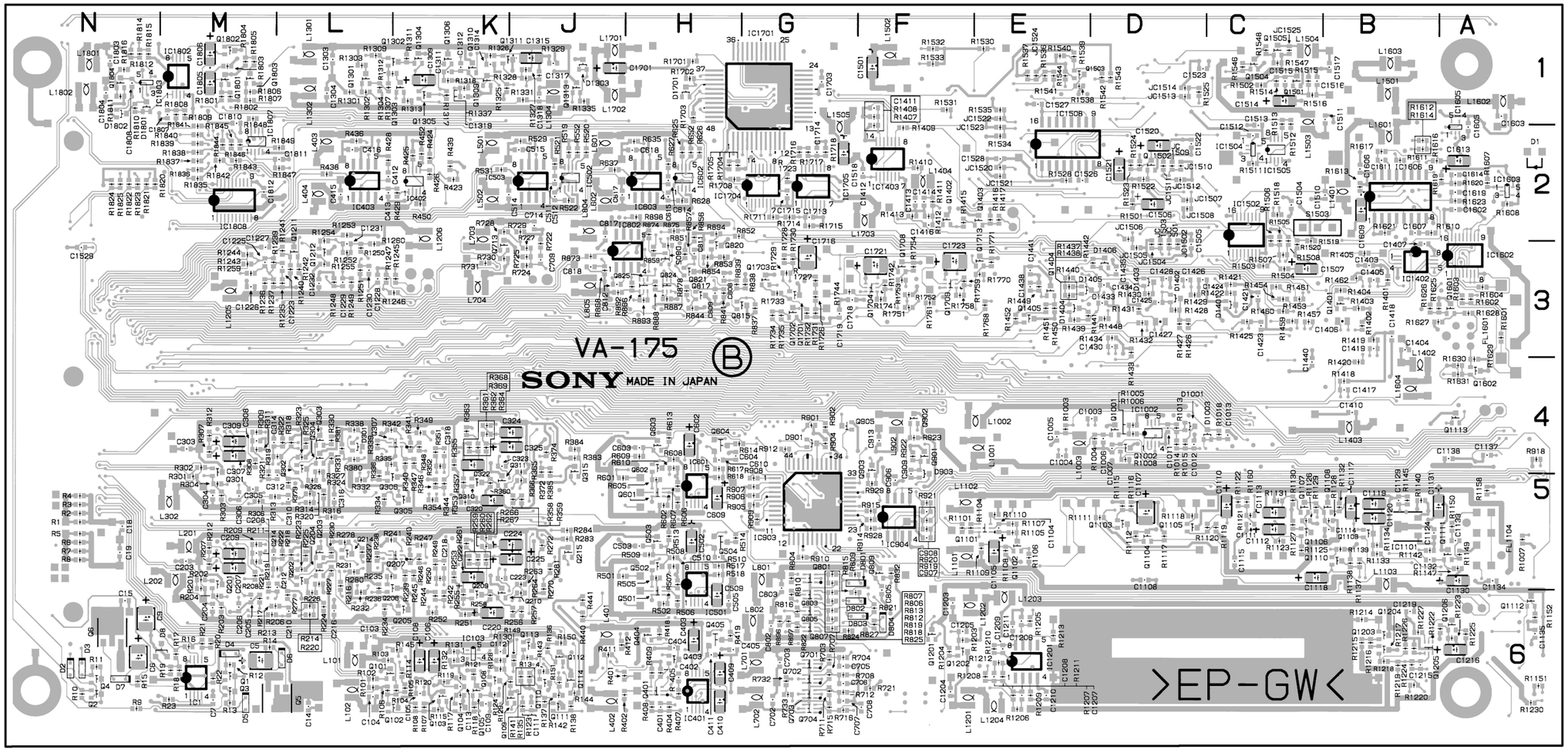

VA-175 -B SIDE-
1-661-625-11

AU-236(1-661-615-12)

C1	B1
C2	C1
C3	*C1
C4	C2
C5	C1
C6	*C2
C7	C2
C8	C2
C9	*A2
CN1	C2
CN2	D2
CN3	*B2
CN4	*A2
D1	D2
D2	D2
D3	D1
D4	C2
D5	C2
D6	C1
D7	B1
D8	C1
D9	B2
D10	B2
D11	*B2
IC1	C2
R1	*D2
R2	*D2
R3	*C2
R4	*D2
R5	*B2
R6	*C2
R7	*B2
R8	*B2
R10	*A2
R11	*A2
R12	*A2
R13	*A2
R14	*B1
R15	*C1
R16	*C1
R17	*D2
R18	*D1
R19	*C1
R20	*C1
R21	*C2
R22	*C2
R23	*C2
R24	*C2
R25	*C2
R26	*C2
R27	*C2
R28	*C2
RV100	A1
S1	B1
S2	A2
S3	A2
S4	D1

* : B SIDE

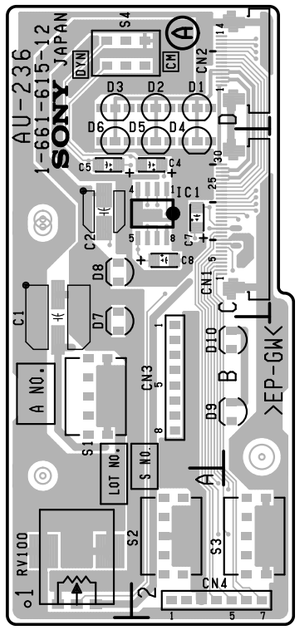

AU-236 -A SIDE-
1-661-615-12

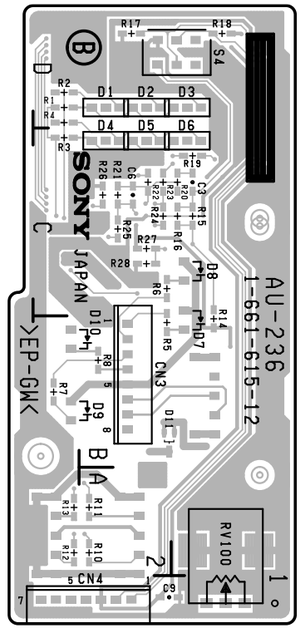

AU-236 -B SIDE-
1-661-615-12

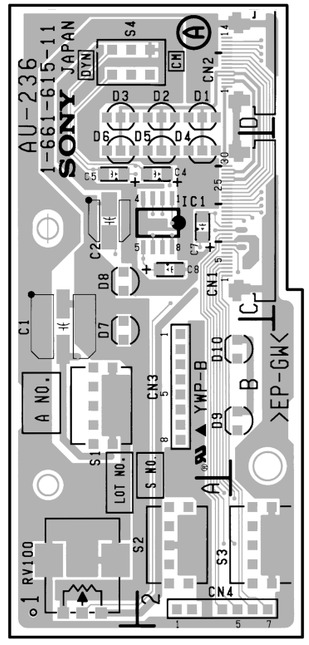

AU-236 -A SIDE-
1-661-615-11

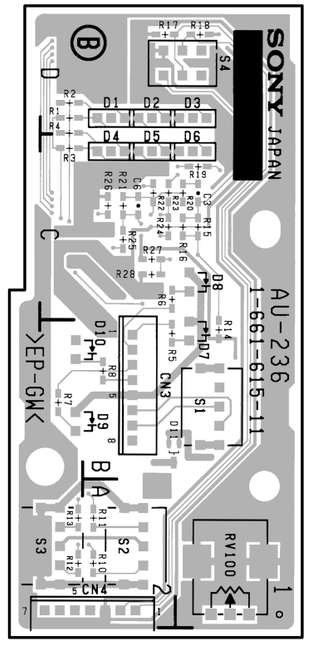

AU-236 -B SIDE-
1-661-615-11

AU-231 (1-661-624-11)

CF41	C3	C136	E2	C452	M5	IC82	A2	Q302	*M6	R75	C2	R255	*B5	R505	*J5	R650	*K3	S201	F6
CF61	C3	C137	F2	C453	M5	IC101	C4	Q303	*M6	R81	A3	R256	*B5	R506	*J5	R651	*L3	S251	F6
CF101	B4	C138	F4	C454	*M4	IC102	E4	Q304	*M6	R82	*A4	R257	*B5	R507	*K5	R652	*L4	S451	M4
CF102	B4	C139	E4	C501	H4	IC103	E2	Q305	L6	R83	A3	R258	*E5	R508	*J4	R653	*L4	S452	M4
CF151	B5	C140	E4	C502	H5	IC104	E4	Q306	L6	R84	B3	R259	*C5	R509	*J4	R654	*L3	S501	J5
CF152	B5	C141	F4	C503	J4	IC105	F3	Q307	K6	R85	*B3	R260	E5	R510	*J5	R655	*M4	S601	M3
CF201	A6	C142	F4	C504	J4	IC151	C5	Q308	K6	R86	*B3	R261	E5	R511	*K4	R656	*M4	S701	M2
CF202	A6	C143	*E4	C505	K4	IC152	F5	Q309	H6	R87	*B3	R262	E5	R512	*J4	R657	*L4	S901	K1
CF251	A5	C144	C4	C506	K5	IC201	B6	Q310	H6	R88	*B2	R263	E5	R513	*K4	R658	*M4		
CF252	A6	C145	C4	C507	K5	IC202	E6	Q601	L3	R89	B2	R264	*E5	R514	*J4	R660	*J3	TP1	D3
		C151	*B5	C508	L5	IC203	F6	Q602	L3	R90	*B2	R265	*F5	R515	*J4	R701	J2	TP21	E3
CN1	N4	C152	B5	C509	L5	IC251	B5	Q603	L3	R91	*B2	R266	*F5	R516	*J4	R702	*K2	TP31	B4
		C153	*B5	C510	L5	IC252	E5	Q604	L3	R92	*B3	R267	*F6	R517	*J4	R703	*J3	TP51	C4
C1	*D3	C154	*C5	C511	L4	IC253	F6	Q605	L4	R93	*A3	R268	*F6	R518	*J4	R704	*J3	TP101	C4
C2	D3	C155	*C5	C512	L5	IC301	J6	Q606	L4	R101	*B4	R269	F6	R519	J4	R705	*J2	TP102	E3
C3	*D3	C156	*B5	C513	N5	IC302	H6	Q701	L2	R108	*B4	R270	G5	R520	*J4	R706	*J3	TP151	F5
C4	*D2	C157	*C5	C601	K3	IC401	F3	Q702	L2	R109	*D4	R271	G5	R521	*J4	R707	*J3	TP152	G5
C5	*D2	C158	B5	C602	K3	IC402	F2	Q703	L2	R111	*C4	R272	F5	R522	K4	R708	*J3	TP201	E6
C6	*D2	C159	*D5	C603	L3	IC403	F3	Q704	L2	R112	*C4	R273	*F5	R523	K5	R709	*J3	TP202	F6
C7	*D3	C160	D5	C604	L3	IC404	F4	Q705	L3	R113	*C4	R274	*F6	R524	*K5	R710	K3	TP251	E6
C8	D2	C161	*F5	C605	L3	IC451	M5	Q706	L3	R114	*C4	R275	*F5	R525	*K5	R711	*K3	TP252	F5
C9	D2	C162	*F5	C606	L4	IC452	M5			R115	*C4	R276	*F5	R526	*L4	R712	*K3	TP451	M5
C10	D2	C163	*F5	C607	L4	IC501	J5	RV41	B2	R116	*C4	R301	*M6	R527	*K4	R713	*J3	TP452	M5
C20	*D3	C164	*F5	C608	M4	IC502	J5	RV61	C2	R117	*D4	R302	*M6	R528	*K4	R714	*J2	TP501	J5
C21	*E3	C165	F5	C609	L4	IC503	J5	RV101	F4	R118	*D4	R303	*M6	R529	*K4	R715	J2	TP502	J4
C22	E3	C166	F5	C701	K2	IC504	J4	RV151	G5	R119	E4	R304	*M6	R530	*L4	R716	*K2	TP601	G3
C23	*E3	C167	F5	C702	K2	IC505	K5	RV201	F6	R120	E4	R305	*M6	R531	*L4	R717	*J2	TP602	J4
C24	*E2	C168	*F5	C703	L2	IC506	K4	RV251	F5	R121	E4	R306	J5	R532	*L4	R718	*J2	TP701	G3
C25	*E2	C205	*A6	C704	L2	IC507	K5	RV501	A2	R123	D4	R307	J5	R533	*L4	R720	*K2	TP702	J3
C26	*E3	C206	A6	C705	L2	IC508	L5	RV502	J5	R124	E3	R308	J6	R534	*K5	R721	K2		
C27	E2	C207	*A6	C706	L3	IC601	J4	RV503	A2	R125	F3	R309	*J6	R535	*L5	R722	*J2	T151	E5
C28	E2	C208	*B6	C707	L3	IC602	J4	RV601	A3	R126	E2	R310	*J6	R536	*L5	R723	*J2	T201	D6
C29	E2	C209	*B6	C708	M3	IC603	J3	RV602	J3	R127	E3	R311	*J6	R537	*L4	R724	*J2	T251	D5
C30	*E2	C210	*A6	C709	L3	IC604	K3	RV701	A3	R128	F3	R312	*J6	R538	*L4	R725	*M2		
C31	*E3	C211	*B6	C901	J1	IC605	K4	RV702	J2	R129	F3	R313	*J6	R539	*L5	R726	*L2	* : B SIDE	
C32	E2	C212	A6	C902	*J1	IC701	J3			R130	E2	R314	*J6	R540	*L5	R727	*L2		
C41	*B3	C213	*E6	C903	*M1	IC702	J3	R1	*D4	R131	E2	R315	J5	R541	*L4	R728	*L2		
C42	*C3	C214	*C6	C904	*J1	IC703	J2	R2	D3	R132	*E4	R316	*H6	R542	*L5	R729	*L2		
C43	*C3	C215	C6	C905	K2	IC704	K2	R3	D3	R133	*E4	R317	*H6	R543	*L5	R730	K2		
C45	*B3	C216	*E6	C906	L2	IC705	K3	R4	*D3	R134	E4	R318	*J6	R544	*L4	R731	*L2		
C46	B2	C217	E6	C907	C2	IC901	L1	R5	*D3	R135	E2	R319	*J6	R545	*L5	R732	*K2		
C47	C3	C218	*E6			IC902	M1	R6	*D3	R136	F4	R320	H6	R546	*L5	R733	*K2		
C48	C2	C219	E6	D1	D2	IC903	J2	R7	*D3	R137	*F3	R321	H6	R547	*L5	R734	*K2		
C49	*C2	C220	*E6	D2	D2	IC904	L2	R8	D2	R138	*F2	R322	H6	R548	*L5	R735	*K2		
C50	C2	C221	E6	D21	E2	IC905	K2	R9	D2	R139	*F3	R323	H6	R549	*L4	R736	*L2		
C61	*C3	C224	G6	D22	E2	IC906	L1	R10	D2	R140	*F2	R324	H6	R601	J3	R737	*L2		
C62	*C3	C225	G6	D23	E2	IC907	J1	R11	D2	R141	*F2	R325	H6	R602	*K3	R738	*L2		
C63	*C3	C226	*F6	D41	B2			R12	D2	R142	*E3	R326	H5	R603	*J4	R739	*L2		
C64	*C3	C251	*A6	D42	C3	LV1	D3	R13	D2	R151	*B4	R401	*G2	R604	*J4	R740	*L2		
C65	*C3	C252	A5	D43	C2	LV21	E3	R21	*E4	R152	*C5	R402	*G2	R605	*J3	R741	*M2		
C66	C2	C253	*A6	D61	C2	LV41	C3	R22	E3	R153	*C5	R403	*F2	R606	*J4	R742	*L2		
C67	D3	C254	*B6	D62	C3	LV61	C3	R23	E3	R154	*C5	R404	*G3	R607	*J4	R743	*M2		
C69	*C2	C255	*B5	D63	C2	LV101	D4	R24	*E3	R155	*C5	R405	G3	R608	*J4	R744	*L2		
C70	C2	C256	*A5	D81	B3			R25	*E3	R156	*D5	R406	*G3	R609	*J4	R745	*L3		
C81	*A3	C257	*B5	D82	B3	L1	D2	R26	*E3	R157	*C5	R407	*F3	R610	K4	R746	*L3		
C82	*B3	C258	A5	D201	B6	L21	E2	R27	*E3	R158	*D5	R408	*F2	R611	*K4	R747	*L3		
C83	B3	C259	*C6	D202	A6	L41	B2	R28	E2	R159	*F5	R409	F3	R612	*K4	R748	*L2		
C84	B3	C260	*E5	D251	A6	L61	C2	R29	E2	R160	F5	R410	*F3	R613	*J4	R749	K3		
C85	*B3	C261	C5	D301	K6	L81	B2	R30	E2	R161	F5	R411	*F3	R614	*J3	R750	*L3		
C86	*B3	C262	*E5	D302	L6	L82	B2	R31	E2	R162	F5	R412	*F4	R615	J3	R751	*K3		
C87	*B2	C263	*E6	D303	K6	L101	E2	R32	E2	R163	F5	R413	*F4	R616	*K3	R752	*L3		
C88	*B2	C264	E5	D304	L6	L102	F2	R33	E2	R164	*F5	R414	*F4	R617	*J3	R753	*K2		
C89	B2	C265	E5	D305	J5	L151	G5	R34	*E2	R165	*F5	R415	*G4	R618	*J3	R754	*L3		
C105	*B4	C266	E6	D306	J5	L152	G5	R35	*E2	R201	*A6	R416	*G4	R620	*K3	R755	*L2		
C106	*B4	C267	*E5	D307	*J6	L153	D5	R41	*B4	R208	*B6	R417	*G4	R621	K3	R756	*M3		
C107	*B4	C268	*F5	D308	H5	L201	G6	R42	C3	R209	*C6	R418	*G4	R622	*J3	R757	*M3		
C108	*D4	C269	G6	D309	J5	L202	G6	R43	C3	R210	*B6	R419	*F3	R623	*J3	R758	*L3		
C109	*D4	C270	G5	D310	H6	L203	C6	R44	B3	R211	*B6	R420	*G3	R624	*J3	R759	*M3		
C110	*C4	C301	L6	D311	A2	L251	G5	R45	B3	R212	*B6	R421	*G3	R625	*M3	R760	*J2		
C111	*C4	C302	K6	D401	F4	L252	G6	R46	*C3	R213	*B6	R422	*F3	R626	*L3	R901	*L1		
C112	*C4	C303	M6	D402	F4	L253	C6	R47	*C3	R214	*E6	R451	*M4	R627	*L3	R902	*L1		
C113	C4	C304	M6	D451	M4	L301	L6	R48	B3	R215	*C6	R452	*M4	R628	*L3	R903	*M1		
C114	D4	C305	M6	D452	M5	L302	M6	R49	B3	R216	E6	R453	*M5	R629	*L3	R904	*M1		
C115	*D4	C306	M6	D501	K4	L303	M6	R50	B2	R217	E6	R454	*M5	R630	*L3	R905	*N1		
C116	*D4	C307	L6	D601	J3	L304	L6	R51	C2	R218	E6	R455	*M5	R631	K3	R906	*N1		
C117	*D4	C308	K6	D602	J3	L351	H6	R52	B2	R219	E6	R456	*M5	R632	*K3	R907	*M1		
C118	D4	C309	J6	D701	J2	L352	H6	R53	C2	R221	*F6	R457	*N5	R633	*K3	R908	*M1		
C119	E4	C310	L6	D702	J2	L501	N5	R54	C2	R222	*F6	R458	M5	R634	*L3	R909	*J1		
C120	D4	C311	L6	D901	L1	L901	J2	R55	B2	R223	*F6	R459	*M4	R635	*K3	R910	*J1		
C122	E3	C312	J6	D902	K1			R61	*C4	R224	F6	R460	*M4	R636	*L3	R911	*L1		
C123	*E2	C313	J6	D903	K1	Q1	D3	R62	C3	R225	G6	R461	*M5	R637	*K3	R912	*K1		
C124	*E3	C314	J6	D904	K1	Q2	D2	R63	C3	R226	F6	R462	*L5	R638	*L3	R913	*K2		
C125	F2	C315	H6	D905	*L1	Q21	E3	R64	C3	R227	G6	R463	*M5	R639	*L3	R914	*L2		
C126	E4	C316	H6			Q22	E2	R65	C3	R228	*F6	R464	*M4	R640	*L3	R915	*L1		
C127	*E4	C317	J6	E1	B5	Q41	B3	R66	*C3	R229	*F6	R465	*M5	R641	*L3	R916	*M2		
C128	E4	C318	J6	E2	N6	Q42	B3	R67	*C3	R230	*F6	R466	*M5	R642	*L4	R917	*M2		
C129	E4	C319	H6	E3	G3	Q61	C3	R68	C3	R231	*F6	R468	*M5	R643	*M3	R918	*M2		
C130	E4	C320	J6			Q62	C3	R69	C3	R232	*E6	R469	M5	R644	*L3	R919	*M2		
C131	F4	C351	H6	FL1	D3	Q81	B2	R70	C2	R233	*F6	R470	M5	R645	*L4	R920	K1		
C132	F4	C352	H6	FL21	E3	Q82	B2	R71	C2	R251	*A5	R501	*J5	R646	*L4	R921	*J1		
C133	E3	C401	F4	FL81	A4	Q104	D4	R72	C2	R252	*B6	R502	*J5	R647	K4	R922	*J1		
C134	E3	C402	G4			Q105	F2	R73	C2	R253	*C5	R503	*J5	R648	*K4	R923	*M3		
C135	*F3	C451	*M4	IC81	B3	Q301	*M6	R74	D2	R254	*B5	R504	*J5	R649	*L4	R924	*L1		

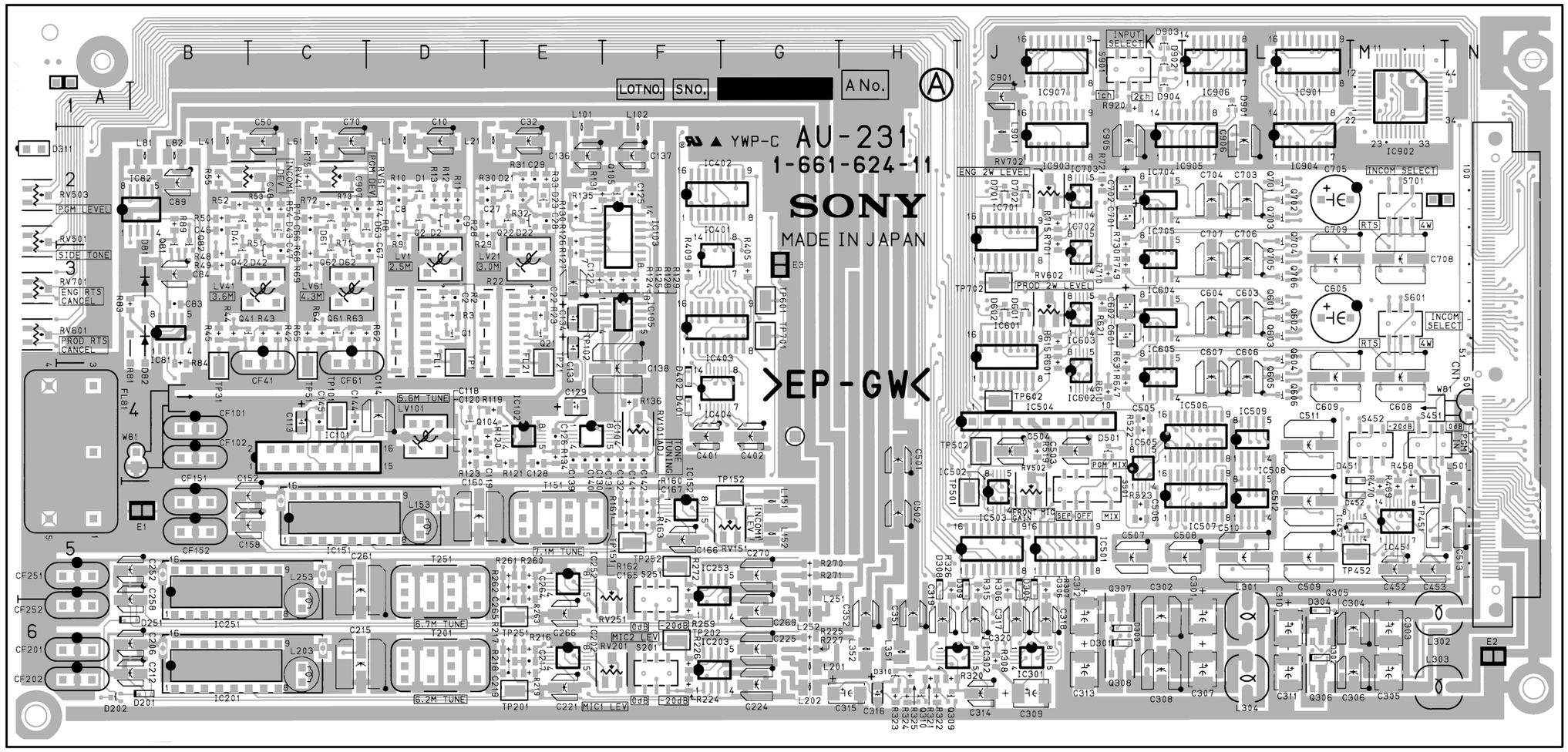

AU-231 -A SIDE-
1-661-624-11

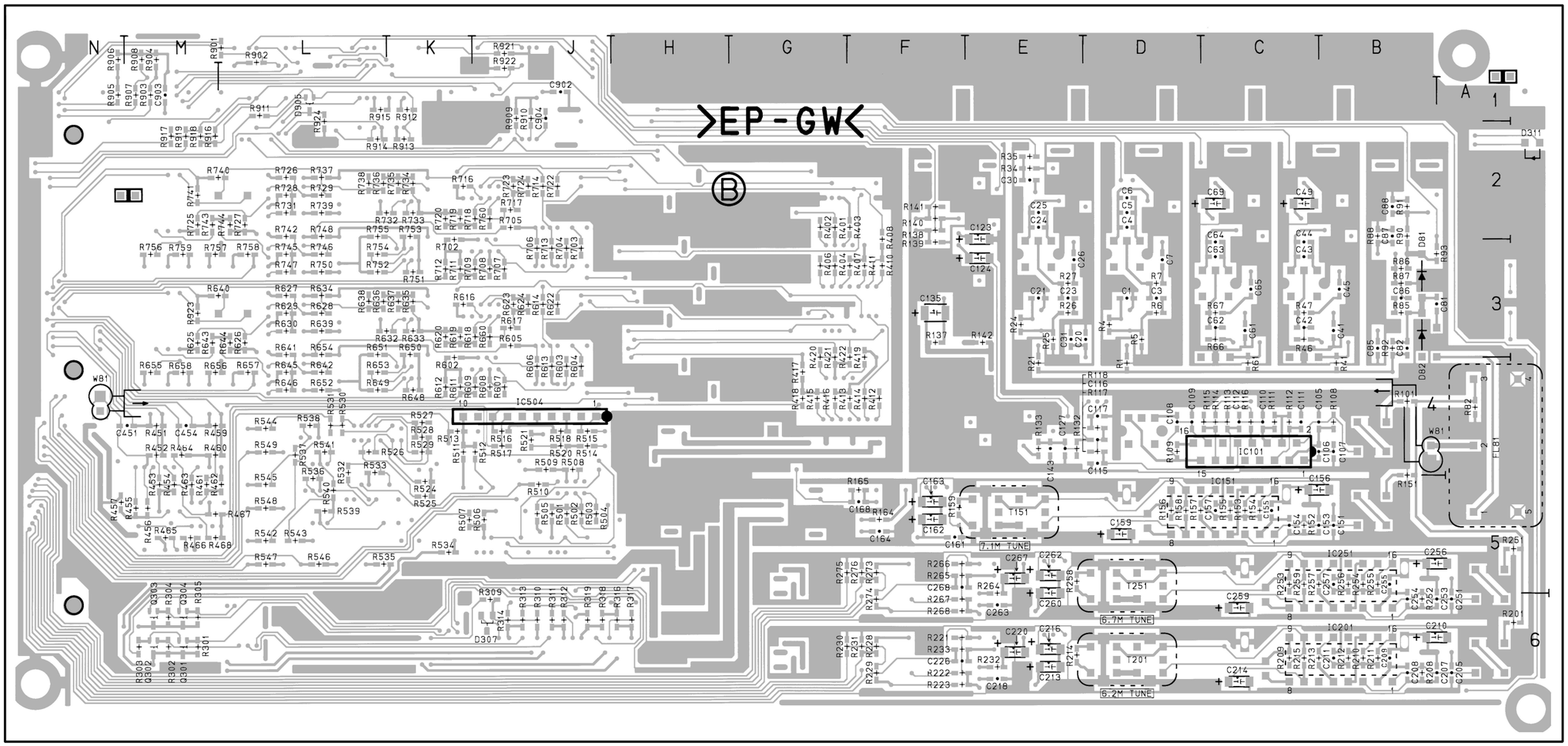

AU-231 -B SIDE-
1-661-624-11

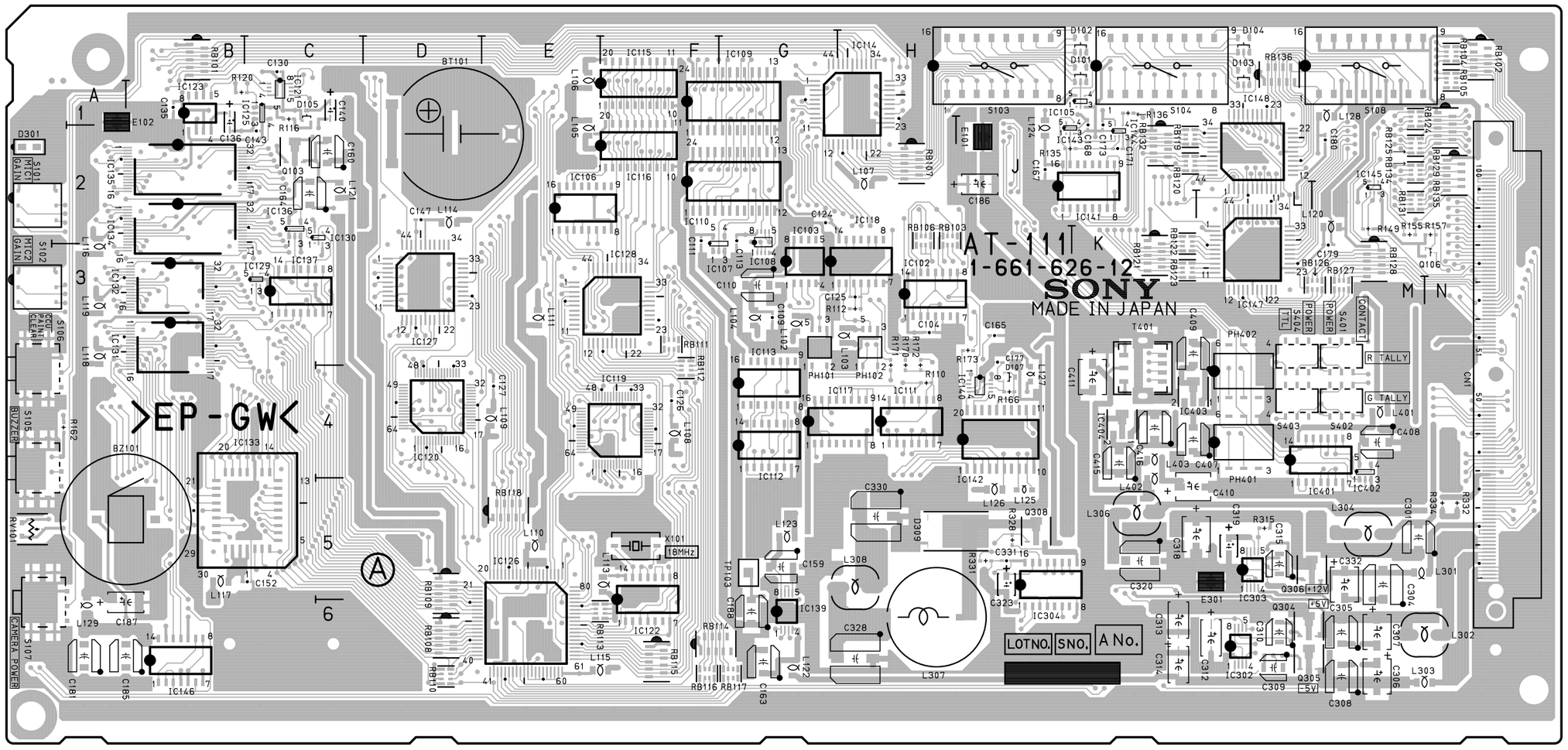

AT-111 -A SIDE-
1-661-626-12

AT-111 (1-661-626-12)

BT101	D2	C118	*F1	C138	*F5	C161	*G5	C181	A6	C315	L5	C404	*M4	D107	J4	D412	*K4	IC116	F2	IC137	C3	L103	H3
		C119	*F2	C139	*F3	C162	*G6	C182	*J3	C317	*L6	C405	*L4	D301	A2	D413	*K4	IC117	G4	IC139	G6	L104	G3
BZ101	A5	C120	*F1	C140	C1	C163	G6	C183	*J3	C318	K5	C406	*L4	D302	*K6			IC118	H3	IC140	J4	L105	E2
		C121	*E2	C141	*E5	C164	C2	C184	*E6	C319	L5	C407	K4	D303	*K6	E101	J2	IC119	F4	IC141	J2	L106	E1
CN1	N4	C122	*G4	C142	*E5	C165	J3	C185	A6	C320	K5	C408	M4	D304	*K6	E102	A1	IC120	D4	IC142	J4	L107	H2
		C123	*H4	C143	C2	C166	*J3	C186	J2	C321	*J6	C409	K3	D305	*L6	E301	L5	IC121	C1	IC143	J2	L108	F4
C103	*H3	C124	G2	C144	*F5	C167	J2	C187	A6	C322	*J5	C410	K5	D306	*L6			IC122	F6	IC144	K2	L109	E4
C104	H3	C125	H3	C147	D2	C168	K1	C188	G6	C323	J5	C411	K4	D307	*L6	IC102	H3	IC123	B2	IC145	M2	L110	E5
C105	*G3	C126	F4	C148	*E3	C169	*J4	C301	M5	C324	*J5	C412	*K4	D308	*L5	IC103	G3	IC125	C1	IC146	B6	L111	E3
C106	*G3	C127	E4	C149	*C3	C170	*J4	C304	M5	C325	*K6	C413	*K3	D309	H5	IC105	K1	IC126	E6	IC147	L3	L113	F5
C108	*K1	C128	*F3	C150	*C2	C171	K2	C305	M6	C326	*J6	C414	*K4	D401	*M3	IC106	E2	IC127	D3	IC148	L2	L114	D2
C109	G3	C129	*F3	C151	*C2	C172	*J4	C306	M6	C327	*K5	C415	K4	D402	*M4	IC107	F2	IC128	F3	IC302	L6	L115	E6
C110	G3	C130	C1	C152	C5	C173	K1	C307	M6	C328	H6	C416	K4	D403	*M3	IC108	G2	IC129	C3	IC303	L5	L116	A3
C111	F2	C131	*F3	C153	*A3	C174	*J4	C308	M6	C329	*H6			D404	*M4	IC109	F2	IC130	C2	IC304	J6	L117	B5
C112	*E2	C132	*F3	C154	*C3	C175	*J3	C309	L6	C330	H5	D101	K1	D405	*L4	IC110	F2	IC131	B3	IC401	L5	L118	A3
C113	G2	C133	*F3	C155	*B2	C176	*M2	C310	L6	C331	J5	D102	K1	D406	*L4	IC111	H4	IC132	B3	IC402	M4	L119	A3
C114	*H4	C134	*F5	C156	*A3	C177	J3	C311	*L6	C332	M5	D103	L1	D407	*L3	IC112	G4	IC133	C5	IC403	K4	L120	M2
C115	*G4	C135	B1	C157	*A3	C178	*B6	C312	L6	C401	*M3	D104	L1	D408	*K3	IC113	G4	IC134	B2	IC404	K4	L121	C2
C116	*G3	C136	B1	C159	G5	C179	M3	C313	K6	C402	*M3	D105	C1	D410	*K4	IC114	H1	IC135	B2			L122	G6
C117	*G2	C137	*F3	C160	C2	C180	M2	C314	K6	C403	*M4	D106	*G6	D411	*M4	IC115	F1	IC136	C2	L102	G3	L123	G5

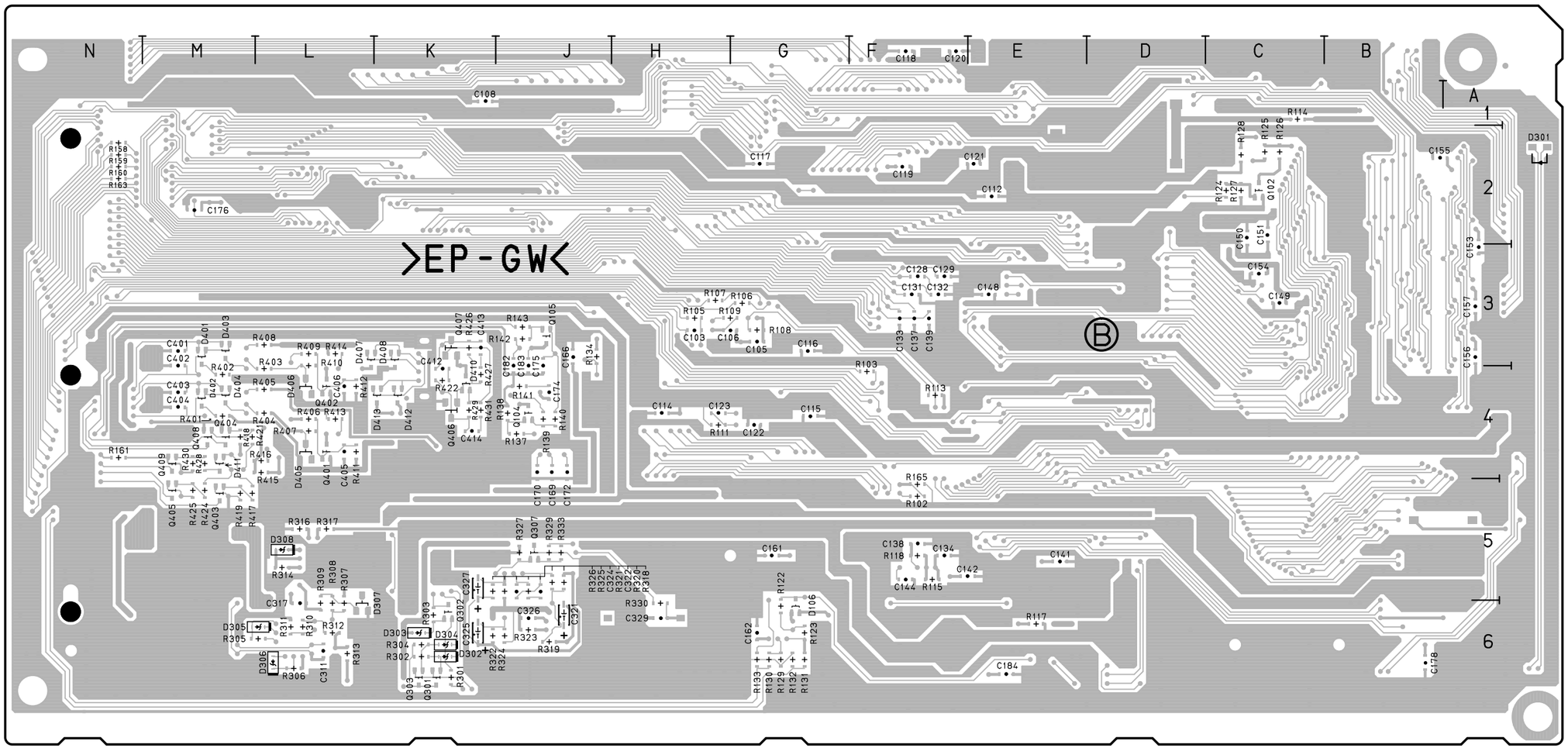

AT-111 -B SIDE-
1-661-626-12

L124	J2	PH402	L4	Q406	*K4	R118	*F5	R140	*J4	R302	*K6	R322	*K6	R408	*L3	R430	*M4	RB118	E5	S101	A2
L125	J5			Q407	*K3	R120	B1	R141	*J4	R303	*K6	R323	*J6	R409	*L3	R431	*K4	RB119	K2	S102	A3
L126	J5	Q102	*C2	Q408	*M4	R122	*G6	R142	*J3	R304	*K6	R324	*J6	R410	*L3			RB120	K2	S103	J1
L127	J4	Q103	C2	Q409	*M4	R123	*G6	R143	*J3	R305	*L6	R325	*J5	R411	*L4	RB101	B1	RB121	K3	S104	K1
L128	M1	Q104	*J4			R124	*C2	R149	M2	R306	*L6	R326	*K5	R412	*L4	RB102	N1	RB122	K2	S105	A4
L129	A6	Q105	*J3	R102	*F5	R125	*C2	R155	M2	R307	*L6	R327	*J5	R413	*L4	RB103	H2	RB123	K3	S106	A4
L301	M5	Q106	N3	R103	*F4	R126	*C2	R157	N2	R308	*L6	R328	J5	R414	*L3	RB104	N1	RB124	M1	S107	A6
L302	M6	Q301	*K6	R105	*H3	R127	*C2	R158	*N2	R309	*L6	R329	*J5	R415	*L4	RB105	N1	RB125	M2	S108	M1
L303	M6	Q302	*K6	R106	*G3	R128	*C2	R159	*N2	R310	*L6	R330	*H6	R416	*L4	RB106	H2	RB126	M3	S401	M3
L304	M5	Q303	*K6	R107	*H3	R129	*G6	R160	*N2	R311	*L6	R331	J5	R417	*M5	RB107	H2	RB127	M3	S402	M4
L306	K5	Q304	L6	R108	*G3	R130	*G6	R161	*N4	R312	*L6	R332	N5	R418	*M4	RB108	D6	RB128	M3	S403	L4
L307	H6	Q305	L6	R109	*G3	R131	*G6	R162	A4	R313	*L6	R333	*J5	R419	*M5	RB109	D5	RB129	N2	S404	L3
L308	H5	Q306	L5	R110	H4	R132	*G6	R163	*N2	R314	*L5	R334	N5	R421	*M4	RB110	D6	RB131	M2		
L401	M4	Q307	*J5	R111	*H4	R133	*G6	R165	*F5	R315	L5	R401	*M4	R422	*K4	RB111	F3	RB132	K2	TP103	G5
L402	K5	Q308	J5	R112	H3	R134	*J3	R166	J4	R316	*L5	R402	*M4	R424	*M5	RB112	F4	RB134	M2		
L403	K4	Q401	*L4	R113	*F4	R135	J2	R170	H3	R317	*L5	R403	*L4	R425	*M5	RB113	E6	RB135	N2	T401	K4
		Q402	*L4	R114	*C1	R136	K1	R171	H3	R318	*J5	R404	*L4	R426	*K3	RB114	F6	RB136	L1		
PH101	G3	Q403	*M5	R115	*F5	R137	*J4	R172	H3	R319	*J6	R405	*L4	R427	*K4	RB115	F6			X101	F5
PH102	H3	Q404	*M4	R116	C1	R138	*J4	R173	J3	R320	*J5	R406	*L4	R428	*M4	RB116	F6	RV101	A5		
PH401	L4	Q405	*M5	R117	*E6	R139	*J4	R301	*K6	R321	*J5	R407	*L4	R429	*K4	RB117	G6			* : B SIDE	

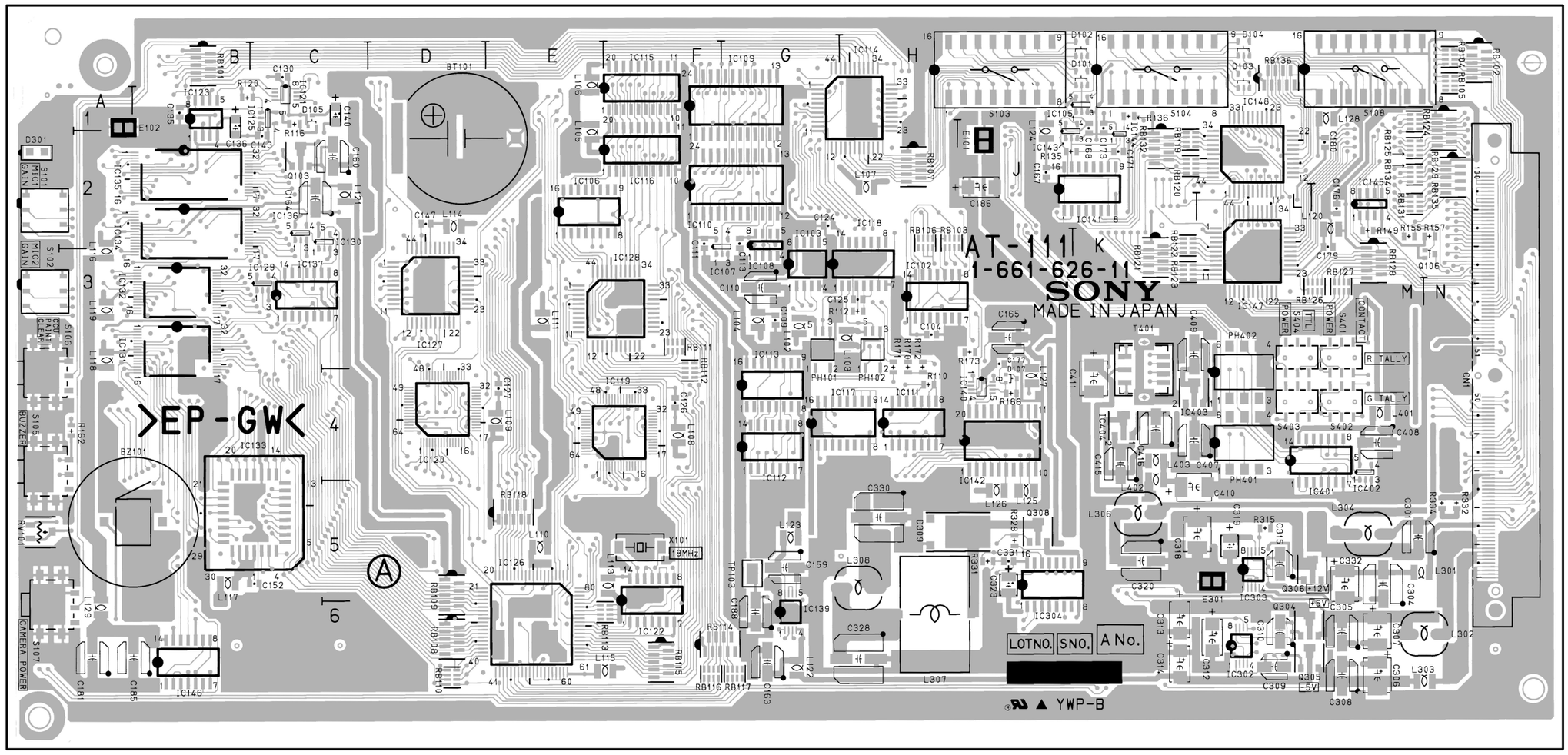

AT-111 -A SIDE-
1-661-626-11

AT-111 (1-661-626-11)

BT101	D2	C118	*F1	C138	*F5	C166	*J3	C186	J2	C321	*J6	C410	K5	D306	*L6	IC102	H3	IC123	B2	IC147	L3	L110	E5
		C119	*F2	C139	*F3	C167	J2	C187	*A5	C322	*J5	C411	K4	D307	*L6	IC103	G3	IC125	C1	IC148	L2	L111	E3
BZ101	A5	C120	*F1	C140	C1	C168	K1	C188	G6	C323	J5	C412	*K4	D308	*L5	IC105	K1	IC126	E6	IC302	L6	L113	F5
		C121	*E2	C141	*E5	C169	*J4	C301	M5	C324	*J5	C413	*K3	D309	H5	IC106	E2	IC127	D3	IC303	L5	L114	D2
CN1	N4	C122	*G4	C142	*E5	C170	*J4	C304	M5	C326	*J6	C414	*K4	D401	*M3	IC107	F2	IC128	F3	IC304	J6	L115	E6
		C123	*H4	C143	C2	C171	K2	C305	M6	C327	*K5	C415	K4	D402	*M4	IC108	G2	IC129	C3	IC401	L5	L117	B5
C103	*H3	C124	G2	C144	*F5	C172	*J4	C306	M6	C328	H6	C416	K4	D403	*M3	IC109	F2	IC130	C2	IC402	M4	L118	A3
C104	H3	C125	H3	C147	D2	C173	K1	C307	M6	C329	*H6			D404	*M4	IC110	F2	IC131	B3	IC403	K4	L119	A3
C105	*G3	C126	F4	C148	*E3	C174	*J4	C308	M6	C330	H5	D101	K1	D405	*L4	IC111	H4	IC132	B3	IC404	K4	L120	M2
C106	*G3	C127	E4	C149	*C3	C175	*J3	C309	L6	C331	J5	D102	K1	D406	*L4	IC112	G4	IC133	C5			L122	G6
C108	*K1	C128	*F3	C150	*C2	C176	M2	C310	L6	C332	M5	D103	L1	D407	*L3	IC113	G4	IC135	B2	IS133	C5	L123	G5
C109	G3	C129	*F3	C152	C5	C177	J3	C311	*L6	C401	*M3	D104	L1	D408	*K3	IC114	H1	IC137	C3			L124	J2
C110	G3	C130	C1	C154	*C3	C178	*B6	C312	L6	C402	*M3	D105	C1	D410	*K4	IC115	F1	IC139	G6	L102	G3	L125	J5
C111	F2	C131	*F3	C155	*B2	C179	M3	C313	K6	C403	*M4	D106	*G6	D412	*K4	IC116	F2	IC140	J4	L103	H3	L126	J5
C112	*E2	C132	*F3	C156	*A3	C180	M2	C314	K6	C404	*M4	D107	J4	D413	*K4	IC117	G4	IC141	J2	L104	G3	L127	J4
C113	G2	C133	*F3	C157	*A3	C181	A6	C315	L5	C405	*L4	D301	A2			IC118	H3	IC142	J4	L105	E2	L128	M1
C114	*H4	C134	*F5	C159	G5	C182	*J3	C317	*L6	C406	*L4	D302	*K6	E101	J2	IC119	F4	IC143	J2	L106	E1	L129	A6
C115	*G4	C135	B1	C161	*G5	C183	*J3	C318	K5	C407	K4	D303	*K6	E102	A1	IC120	D4	IC144	K2	L107	H2	L301	M5
C116	*G3	C136	B1	C162	*G6	C184	*E6	C319	L5	C408	M4	D304	*K6	E301	L5	IC121	C1	IC145	M2	L108	F4	L302	M6
C117	*G2	C137	*F3	C163	G6	C185	A6	C320	K5	C409	K3	D305	*L6			IC122	F6	IC146	B6	L109	E4	L303	M6

http://getMANUAL.com

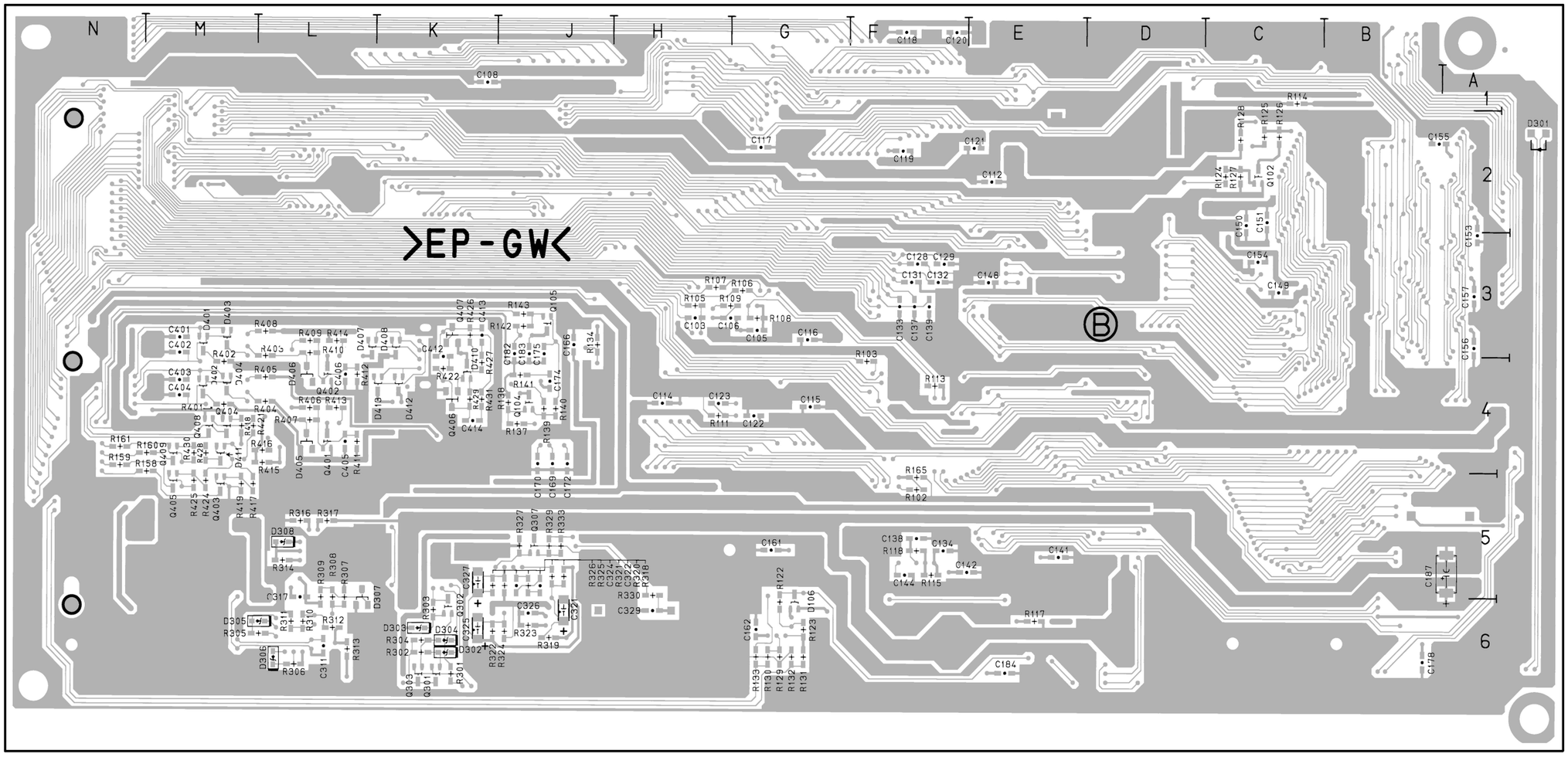

AT-111 -B SIDE-
1-661-626-11

L304	M5	Q305	L6	RB110	D6	RB131	M2	R116	C1	R142	* J3	R309	* L6	R330	* H5	R416	* L4	S404	L3
L306	K5	Q306	L5	RB111	F3	RB132	K2	R117	* E6	R143	* J3	R310	* L6	R331	J5	R418	* M4		
L307	H6	Q307	* J5	RB112	F4	RB134	M2	R118	* F5	R149	M2	R311	* L6	R332	N5	R421	* M4	TP103	G5
L308	H5	Q308	J5	RB113	E6	RB135	N2	R120	B1	R155	M2	R312	* L6	R333	* J5	R422	* K4		
L401	M4	Q401	* L4	RB114	F6	RB136	L1	R122	* G6	R157	N2	R313	* L6	R334	N5	R426	* K3	T401	K4
L402	K5	Q402	* L4	RB115	F6			R123	* G6	R162	A4	R314	* L5	R401	* M4	R427	* K4		
L403	K4	Q404	* M4	RB116	F6	RV101	A5	R124	* C2	R165	* F5	R315	L5	R402	* M4	R429	* K4	X101	F5
		Q406	* K4	RB117	G6			R127	* C2	R166	J4	R316	* L5	R403	* L4	R431	* K4		
PH101	G3	Q407	* K3	RB118	E5	R102	* F5	R129	* G6	R170	H3	R317	* L5	R404	* L4			* : B SIDE	
PH102	H3	Q408	* M4	RB119	K2	R103	* F4	R130	* G6	R171	H3	R318	* J5	R405	* L4	S101	A2		
PH401	L4			RB120	K2	R105	* H3	R131	* G6	R172	H3	R319	* J6	R406	* L4	S102	A3		
PH402	L4	RB101	B1	RB121	K3	R106	* G3	R132	* G6	R173	J3	R320	* J5	R407	* L4	S103	J1		
		RB102	N1	RB122	K2	R107	* H3	R133	* G6	R301	* K6	R321	* J5	R408	* L3	S104	K1		
Q104	* J4	RB103	H2	RB123	K3	R108	* G3	R134	* J3	R302	* K6	R322	* K6	R409	* L3	S105	A4		
Q105	* J3	RB104	N1	RB124	M1	R109	* G3	R135	J2	R303	* K6	R323	* J6	R410	* L3	S106	A4		
Q106	N3	RB105	N1	RB125	M2	R111	* H4	R137	* J4	R304	* K6	R325	* J5	R411	* L4	S107	A6		
Q301	* K6	RB106	H2	RB126	M3	R112	H3	R138	* J4	R305	* L6	R326	* K5	R412	* L4	S108	M1		
Q302	* K6	RB107	H2	RB127	M3	R113	* F4	R139	* J4	R306	* L6	R327	* J5	R413	* L4	S401	M3		
Q303	* K6	RB108	D6	RB128	M3	R114	* C1	R140	* J4	R307	* L6	R328	J5	R414	* L3	S402	M4		
Q304	L6	RB109	D5	RB129	N2	R115	* F5	R141	* J4	R308	* L6	R329	* J5	R415	* L4	S403	L4		

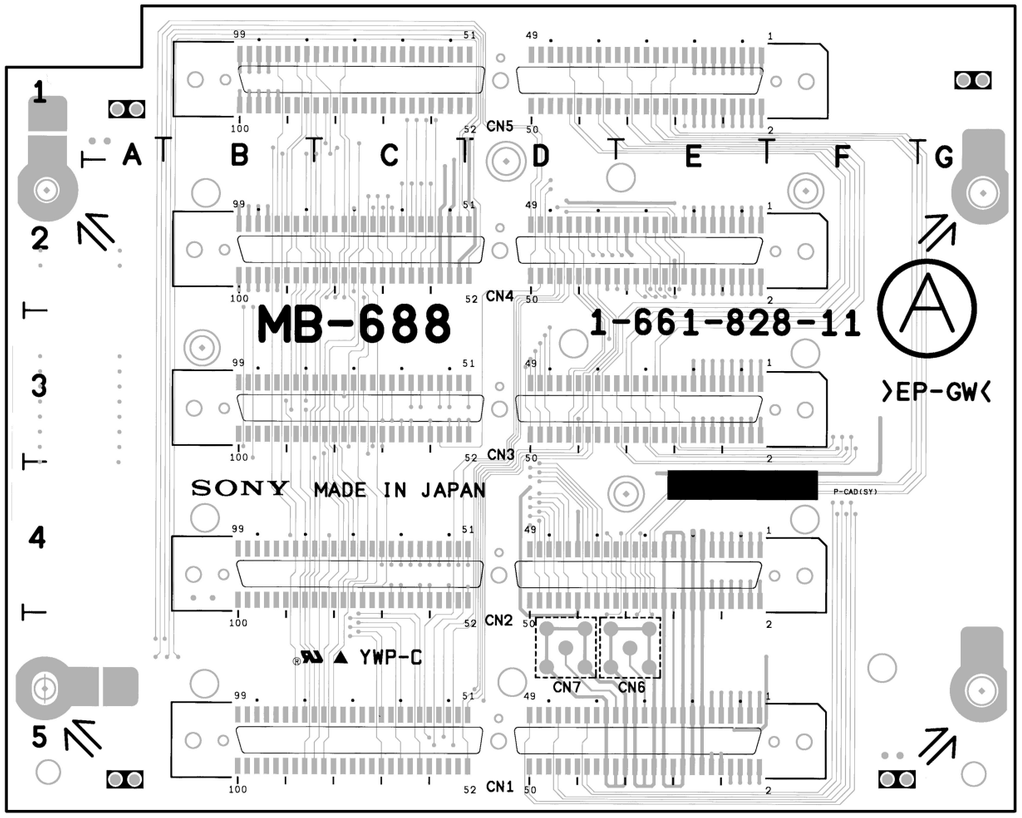

MB-688 -A SIDE-
1-661-828-11

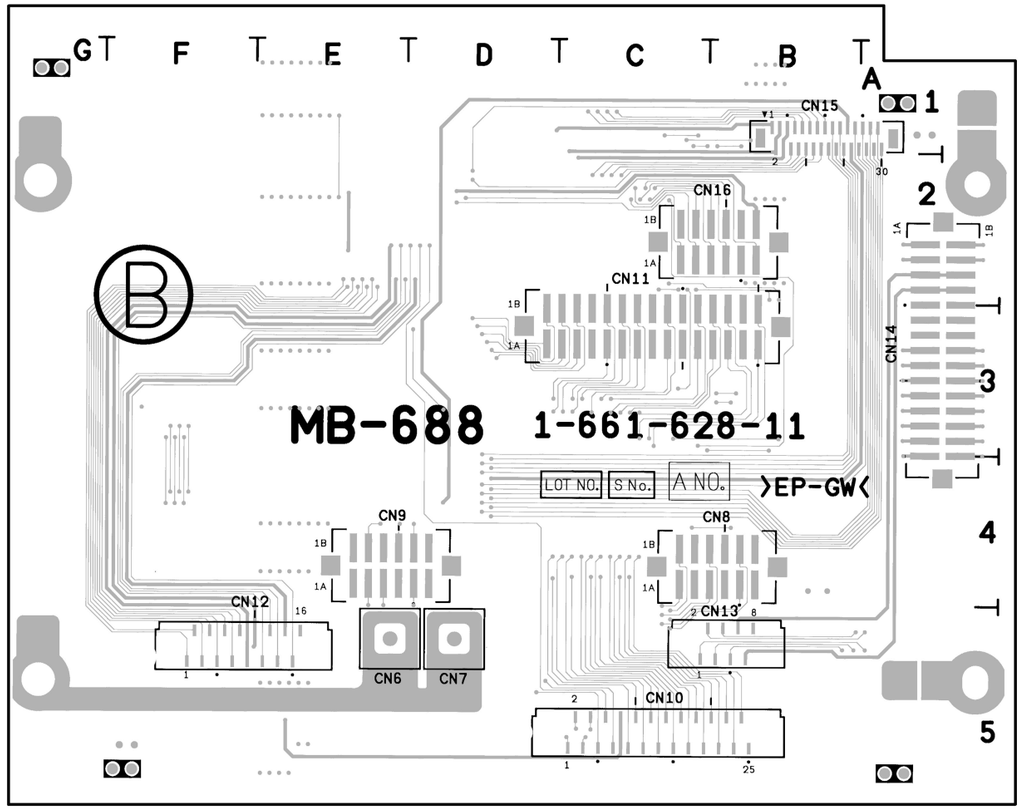

MB-688 -B SIDE-
1-661-828-11

MB-688 (1-661-828-11)

CN1	D5
CN2	D3
CN3	D3
CN4	D2
CN5	D1
CN6	* E5
CN7	* D5
CN8	* C4
CN9	* E4
CN10	* C5
CN11	* C2
CN12	* E5
CN13	* C5
CN14	* A3
CN15	* B1
CN16	* B2

* : B SIDE

このマニュアルに記載されている事柄の著作権は当社にあり，説明内容は機器購入者の使用を目的としています。
従って，当社の許可なしに無断で複写したり，説明内容(操作，保守等)と異なる目的で本マニュアルを使用することを禁止します。

The material contained in this manual consists of information that is the property of Sony Corporation and is intended solely for use by the purchasers of the equipment described in this manual.
Sony Corporation expressly prohibits the duplication of any portion of this manual or the use thereof for any purpose other than the operation or maintenance of the equipment described in this manual without the express written permission of Sony Corporation.

Le matériel contenu dans ce manuel consiste en informations qui sont la propriété de Sony Corporation et sont destinées exclusivement à l'usage des acquéreurs de l'équipement décrit dans ce manuel.
Sony Corporation interdit formellement la copie de quelque partie que ce soit de ce manuel ou son emploi pour tout autre but que des opérations ou entretiens de l'équipement à moins d'une permission écrite de Sony Corporation.

Das in dieser Anleitung enthaltene Material besteht aus Informationen, die Eigentum der Sony Corporation sind, und ausschließlich zum Gebrauch durch den Käufer der in dieser Anleitung beschriebenen Ausrüstung bestimmt sind.
Die Sony Corporation untersagt ausdrücklich die Vervielfältigung jeglicher Teile dieser Anleitung oder den Gebrauch derselben für irgendeinen anderen Zweck als die Bedienung oder Wartung der in dieser Anleitung beschriebenen Ausrüstung ohne ausdrückliche schriftliche Erlaubnis der Sony Corporation.

SAFETY CHECK-OUT

After correcting the original service problem, perform the following safety checks before releasing the set to the customer :

Check the metal trim, "metallized" knobs, screws, and all other exposed metal parts for AC leakage. Check leakage as described below.

LEAKAGE TEST

The AC leakage from any exposed metal part to earth ground and from all exposed metal parts to any exposed metal part having a return to chassis, must not exceed 3.5 mA. Leakage current can be measured by any one of three methods.

1. A commercial leakage tester, such as the Simpson 229 or RCA WT-540A. Follow the manufacturers' instructions to use these instruments.
2. A battery-operated AC milliammeter. The Data Precision 245 digital multimeter is suitable for this job.
3. Measuring the voltage drop across a resistor by means of a VOM or battery-operated AC voltmeter. The "limit" indication is 5.25 V, so analog meters must have an accurate low-voltage scale. The Simpson 250 and Sanwa SH-63Trd are examples of a passive VOM that is suitable. Nearly all battery operated digital multimeters that have a 20 V AC range are suitable. (See Fig. A)

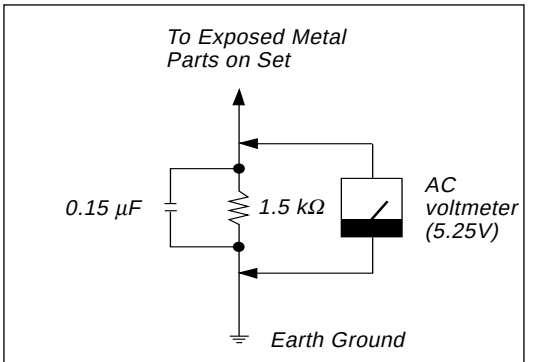

Fig A. Using an AC voltmeter to check AC leakage.

CCU-550 (J,UC)
CCU-550P (CE) J,E
3-191-082-02 Volume-2

Sony Corporation
Broadcast Products Company

Printed in U.S.A
1997. 1 76
©1997
Published by Broadcast Products Company